BME Design-Fall 2023 - TYLER HAUPERT
Complete Notebook

PDF Version generated by

TYLER HAUPERT

on

Dec 15, 2023 @08:40 PM CST

Table of Contents

FOR FUTURE GROUPS 2
- Intro 2
- Locker(s), Materials, and Expenses 3
- Fabrication 4
- CAD Files 8
- Testing 9
- Advisors 10
- Misc. items and Future Directions 11

Project Information 14
- Team contact Information 14
- Project description 15

Team activities 16
- Team Meetings 16
  - 9/11/2023 - Team Meeting 1 16
  - 9/25/2023 - Team Meeting 3 20
  - 10/2/2023 - Team Meeting 4 23
  - 10/9/2023 - Team Meeting 5 26
  - 10/16/2023 - Team Meeting 6 27
  - 10/18/2023 - Team Meeting 7 29
  - 11/20/2023 - Team meeting 10 34
- Client Meetings 37
  - 9/15/2023 - Client Meeting 1 37
  - 10/4/2023 - Client Meeting 2 41
- Advisor Meetings 43
  - 9/8/2023 - Advisor Meeting 1 43
  - 9/15/2023 Advisor Meeting 2 44
  - 9/29/2023 - Advisor Meeting 4 46
  - 11/17/2023 Advisor Meeting 48
  - 10/20/2023-Advisor Meeting 49
  - 10/13/2023-Advisor Meeting 50
  - 10/25/2023-Advisor Meeting 51
- Additional Meetings 52
  - 9/19/2023 - Meeting with Dr. Nimunkar 52
- Deliverables 55
  - 9/15/2023 - PDS 55
  - 9/29/2023 - Design Matrix 63
  - 10/4/2023 - Preliminary Presentation 64
  - 10/13/2023 - Preliminary Report 65
  - 12/8/2023 - Final Poster 92
  - 12/15/2023 - Final Report 93
- Materials and Expenses 123
  - Power Adapter 123
- Testing and Results 124
  - Protocols 124
    - Direct connection testing protocol 124
    - Direct turn of knob protocol 125

Stress test in solid works 127
to use microscope 128
Direct connection Final testing protocol 129
Loss of motion Final testing protocol 130
Linear Motion Final testing protocol 131
Experimentation 132
Direct connection x-axis testing 132
Direct turn of knob protocol 133
Final testing data- raw data 134
Project Files 135
CAD Files 135
9/28/2023 - Linear Rails Design 135
Spur Gear Design 138
Worm Drive Design 140
Direct Attachment V1 142
Prior Team Work 143
Fall 2022 143
Final Report 143
Final Notebook 144
Final Poster Presentation 145
Preliminary Report 146
Preliminary Presentation 147
PDS 148
Spring 2022 149
Final Report 149
Final Notebook 150
Final Poster Presentation 151
Executive Summary 152
Preliminary Report 153
Preliminary Presentation 154
PDS 155
Fall 2021 156
Final Report 156
Final Notebook 157
Final Poster Presentation 158
Preliminary Report 159
Preliminary Presentation 160
PDS 161
Spring 2021 162
Final Report 162
Final Notebook 163
Final Poster Presentation 164
Executive Summary 165
Fall 2020 166
Final Report 166
Final Poster Presentation 167
Preliminary Presentation 168
Tyler Haupert 169
Research Notes 169
Competing Designs 169
9/15/2023 - "Step-by-step guide to building an inexpensive 3D printed motorized positioning stage for automated high-content screening microscopy" 169
9/15/2023 - The OpenFlexture Project 171
9/15/2023 - Nikon Motorized Microscopes 172
9/15/2023 - The FlexiScope 173
Past Project Review 174
10/12/2023 - LabArchives Review 174
Spur Gear Design 177
9/29/2023 - Spur Gear Math 177
Background 183
10/13/2023 - thoughts 183

Design Ideas 185
9/25/2023 - Tyler Design Ideas 185
9/29/2023 - Spur Gear Design Preliminary Drawing 188
12/14/2023 - Sketches relating to final design 190
12/14/2023 - Sketches relating to extra shaft confinement 191
Training Documentation 192
9/15/2023 - Lab Safety Training Documentation 192
9/15/2023 - Red Permit Documentation 193
9/15/2023 - Green Permit Documentation 195
Personal Contributions 196
9/15/2023 - Progress Report 196
9/15/2023 - Problem Statement 202
9/15/2023 - Team Meeting 1 Notes 203
9/15/2023 - Client Meeting 1 Notes 208
9/15/2023 - Advisor Meeting 2 Notes 210
9/15/2023 - PDS 212
9/17/2023 - Progress Report 2 215
9/25/2023 - Team Meeting Notes 3 217
9/27/2023 - Design Matrix 220
Preliminary Presentation 221
10/9/2023 - Team Meeting 5 222
10/13/2023 - Preliminary Report 224
10/18/2023 - Team Meeting 7 Notes 229
10/19/2023 - Meeting with Dr. Nimunkar 232
12/15/2023 - Final Report 235
Tong Lecture - 11/10/2023 243
Julia Salita 246
Research Notes 246
Biology and Physiology 246
biohazard level 1 -3 entries 246
Fabrication 249
Competing Designs 253
open flixure 253
ASR series 254
Open source 3D printed inverted fluorescence microscope motorized stage 255
Past Semesters 256
Notes On Past Semesters 256
past PDS_for understanding 263
Design Ideas 265
Clip-on, Gear-Belt Design Julia Salita 265
Shaft stability 267
Training Documentation 268
Osha and biosafety lab training 268
Green Permit and red permit 269
Personal Contributions from Deliverables 271
PDS 271
Design Matrix 274
Preliminary Presentation 275
Final Report 277
Sawyer Bussey 281
Personal Contributions 281
Project Summary and Overview 281
9/14/2023 - Week 1 Progress Report 282
9/21/2023 Week 2 progress report 287
9/28/2023 Week Three Progress Report 292
9/28/2023 Product Design Specifications 297
9/28/2023 Design Matrix 305
10/10/2023 Preliminary Presentation 308
10/05/2023 Week 4 Progress Report 312
10/12/2023 Week 5 Progress Report 318
Progress report 6 323

Progress report 7 325
Progress report 8 326
Progress report 9 327
10/13/2023 Preliminary Report 328
Contribution to final report- 12/14/2023 331
Progress report 10 337
Progress report 11 338
Progress report 12 339
Research Notes 340
Competing Designs 340
9/29/2023 Worm gear research and design 340
Materials and Components Research 343
Research on Gears 9/14/2023 343
Research on electrical components 9/14/2023 344
9/21/2023 Gear Materials Research 345
10/11/2023 Nylon Gears Research 346
10/27/2023 Fabrication and materials research 347
Gearing Research 350
Countertop rail design 351
Previous Years Research and Thoughts 352
9/17/2023 - Notes on Improving on previous years 352
Template for documents-Sawyer Bussey 353
Tong Lecture Notes 354
Zhaoyun/Jerry Tang 355
Research Notes 355
Research Note 1 355
Research Note 2 356
Reserch Note 3 359
Research Note 4 360
Research for competing designs 1 361
Research for competing designs 2 362
Research for competing designs 3 363
Design Ideas 364
Design sketch 1 364
Design sketch 2 365
Design sketch 3 366
Design Sketch 4 367
Personal Contribution 368
9/15/2023 - Progress Report 368
week 2 progress report 374
9/22/2023 - PDS 375
Week 3 Progress Report 376
Design Matrix 377
Week 4 Progress Report 379
Preliminary Presentation 380
Week 5 Progress Report 381
Preliminary Report 382
Testing Ideas 383
Progress report 6 384
progress report 7 386
progress report 8 388
Progress report 9 390
Progress Report 10 392
Progress report 11 394
Progress report 12 396
BPAG expense sheet 398
Final Poster 399
Final Poster Presentation 402
Final Report 403
Direct connection testing 1 405
Tong Lecture Notes 406

BPAG meeting notes 408
Nick Symons 411
Research Notes 411
Competing Designs 411
OpenStage research 411
General Research 412
Image Stitching 412
Eclipse Ti2-U research 413
Inventor Gear Generator 414
First time using previous semester's design 415
After meeting with Dr Nimunkar 416
Joystick Research 417
Reading user input on the Arduino serial 418
Tong Lecture 419
Designs 420
Stepper motors 420
Worm gear design 421
Preliminary Design 423
Direct attachment to manual knob 426
Update to direct attachment 428
Electronics Box 429
Personal Contributions 430
Progress report 1 430
PDS work 9/18/23 431
PDS work 9/22/23 432
Progress report 2 433
Progress report 3 438
Progress report 4 443
Progress report 5 445
Progress report 6 446
Preliminary Report 447
Progress report 7 449
Progress report 8 450
Progress report 9 451
Progress report 10 452
Progress report 11 453
Progress report 12 454
Arduino Code 455
Motor Movement with Joystick (v1) 455
Simple Motor Movement 456
Motor Movement with Joystick v2 457
Motor Movement with Serial Monitor Input 458
Simple motor movement with number of steps 459
Joystick Test Code 460
Final Code 461
Other Notes 462
Stepper Driver Switch Settings 462
Joystick Wiring 465
2014/11/03-Entry guidelines 466
2014/11/03-Template 467

Intro

TYLER HAUPERT - Dec 06, 2023, 11:32 AM CST

Hello there,

My name is Tyler Haupert, and I am the current team leader of the low-cost motorized microscope group. If you are reading this, you are most likely one of the BME Design teams following mine working on this project. This project has been going for many semesters. While reviewing documentation from previous groups I noticed an unfortunately common theme of new groups getting this project and restarting everything from the ground up without any guidance from previous teams. While I do understand that the need to iterate on designs is important, I don't think this pattern has been super efficient so far. My hope is that with the information available in the following pages, you will be able to understand where we are at, why we made the decisions that lead us here, and where we think this project needs to go in the future. The final poster will also be a good source of information for this sort of thing, but my hope is that these less-formal notebook entries will be more in depth and useful for future groups so they can really pick up where we left off. I hope you find the following pages helpful.

Best regards,

Tyler

TYLER HAUPERT - Dec 06, 2023, 11:23 AM CST

JULIA SALITA - Dec 15, 2023, 4:03 PM CST

P.S. please feel free to reach out to us with any questions along the way!

Locker(s), Materials, and Expenses

TYLER HAUPERT - Dec 06, 2023, 11:35 AM CST

This is just an outline right now to be filled out later.

2 lockers, materials from our groups and previous ones, and a spreadsheet including the cost of these materials and where we got them (link preferably)

stepper motors

inserts used in different parts

rail sawyer bought

butting board

anything else in lockers

JULIA SALITA - Dec 15, 2023, 3:55 PM CST

Currently the team has 2 lockers located in the back of the 1002 BME teaching lab. One is the top most left locker and the other is the chest level row and the third locker from the left (they are labeled with the project's name If I got that wrong). All materials from our project and previous groups should be within both lockers. Below you will find a link to a spreadsheet detailing the cost of the materials we used and were we got them.

https://docs.google.com/spreadsheets/d/1HDHnQ7bdjoLShd9y31xKS_pVe79aoykWFaeUQ9-aaQY/edit?usp=sharing

We do not have a full list detailing what is actually in the lockers from other teams but hope this helps and please reach out if you have any questions.

Fabrication

TYLER HAUPERT - Dec 14, 2023, 2:29 PM CST

Structural:

GMP:

I made this over thanksgiving break with my dad so it wasn't the most precise manufacturing process, but it worked. I also bought an extra cutting board (I will get to this in a moment) and left it in the team locker incase any future groups feel the need to refabricate the GMP and want the same material as before. The design starts with a 12"x16" cutting board that I bought from walmart. From what I could find, this board was most likely HDPE, and it was much cheaper and thicker than the alternative options I could find at Menards (again, I was at home over break so did not have access to scrap materials at the Makerspace or the BME design closet. Our original goal was to make it so that this board would be mounted to these holes on the microscope.

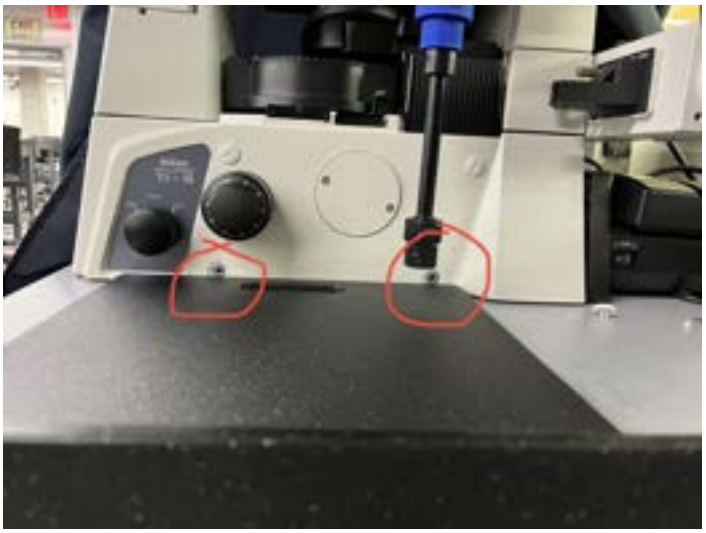

To do this we figured we needed a lip, but didn't know how high to make it, so in order to error on the side of caution, we cut 2 inches off the long edge so that the board was now split into a 2"x12" piece and a 14"x12" piece. Now we wanted to mount the smaller piece to the rough edge of the cutting board. We were worried about the plastic bulging if we just screwed right in (and also were worried about getting the screws in straight) so we started by predrilling with a small screw, and worked up in size until the hole was big enough to guide the larger screw in. This was not perfect, and you can see on the bottom of the board that we did go through once. after the holes were all good, we reversed the screws out, applied grey-setting epoxy to the surfaces that were mating (and the hole on the bottom) and then re-set the screws and gave the epoxy time to set. This was the extent of the work I did at home. After coming back, I was able to use a digital calipers and a ruler to decide on dimensions. Before I get into more measurements, it is worth noting that both inches and metric units were used for measuring throughout this semester, so a lot of converting will happen in this project. I measured the screw holes to be 7 and 7/8 inches apart, so I dimensioned the board down to 9 inches wide to leave a a little extra. I also dimensioned the lip down so it fit under the knobs. I can't remember what it's height is now, but I do know that it started at 2 inches. you should be able to take this measurement on your own, as the board is in the locker. All dimensioning can be done using the band and table saws in the team lab and makerspace. We had previously planned on cutting the length of the board down too, but left it long incase a future group found that helpful for design changes. Much later in the semester we mounted the rail to the board by setting the design up, centering everything, and then making marks on the board through the holes to mark where the screws needed to go. I forgot to

mention this, but after all cuts I did, I used a deburring tool and sometimes a blowtorch/heat gun to clean up the rough edges/faces to make everything more presentable.

Edit: We ended up using velcro to mount the GMP to the microscope because of time constraints. I do have a plan for a mounting plate so that the GMP could be screwed in but I don't have any sketches or anything. An adapter plate will be needed though because the board it too thick for the screws to make it through into the correct hole (my explanation is bad but just take my word on this one). I already made the actual plate and its in the locker so all that you would need to do it make a few holes with the drill press and tap a couple holes. If you decide to make this plate just set up a meeting with me and I can explain what I had in mind for everything. My contact info is in the project information folder

Gears:

We got most of our gear inspiration from our meeting with Dr. Westphal. We were having issues figuring out how to make gears in CAD, so he recommended taking the SW files from McMaster-Carr and editing those part files to fit our needs. After some rough estimations and messing around with a few of the gear options they had on their website, I decided to go with this gear. I wont get into all the steps I did in CAD to edit this part into the knob gears and stepper gears, but in the "CAD Files" page you should be able to find everything you need. **All parts we 3D printed were printed with black PLA on the Bambu Labs printers with 15% infill, fine resolution, and supports enabled.**

Knob Gears:

From the base gear file, I made a part to hold 3 inserts that would mount a gear to each of the knobs. Each of these knobs took a few iterations to perfect. The center hole started off too small, and we had to slowly make the hole bigger to get the right fit. You will only be getting the file with the file with the final dimensions. After being 3D printed, we melted 3 M4 x 6mm x 6mm inserts into the holes we made in the print.

Stepper Gears:

At first I laser cut the stepper gears. I though this made more sense precision-wise and it was a way faster fabrication-wise. I quickly decided that the friction fitting the gears onto the stepper shaft was just not a great solution, and after seeing how well the knob gears turned out, I decided that a 3D printed gear would be a more robust solution. Since the stepper shaft is in a D shape, we only needed one insert (M3 x 6mm x 5mm) on the flat face to secure the stepper gear to the stepper shaft

Stepper mount:

The stepper mount was created based on measurements we made on the stepper motors. I really just made this based on intuition without any prior inspiration. My only design parameters were that it had to hold a stepper motor upside down and have enough clearance under for the gear to not contact the supports but also be able to interface with the knob gears. Since two stepper gears have to be held at different heights, I had to create two different stepper mounts with the taller one being approx. 20mm taller than the short one. Our first prints of these were way off but we quickly got the heights right by taking measurements and reprinting the files. I wanted to add in an element to constrain the movement of the knob shaft, so I created the dual mount. I uploaded the tall and short stepper into an assembly and made a couple mates to line them up and then did a distance mate to set them the exact distance apart the needed to be based on gear dimensions. I then saved the file as a part file and created the bridge between the two parts and added in the slot for the knob shaft. I will leave you guy with the tall mount, the short mount, the final dual mount part file, and the assembly I mentioned with the mates I talked about. Keep in mind if you edit the stepper mounts you may have to create a new assembly and then from that a new part file in order to fabricate an updated dual mount file.

Sled mount:

This was created based on the dimensions of the gears and dual stepper mount, as well as the carriage it was mounting on top of. Realistically this sled could also have been mounted to 2 carriages, but we decided to go with one because a 2 carriage design limited the travel of the stage based on how we mounted the rail. The dimensions of the carriage can be found here (model number MGN 12H). The holes came out a little too small for the screws meant to screw into the carriage threads so we used a drill to make the holes slightly bigger.

CAD Files

TYLER HAUPERT - Dec 06, 2023, 2:04 PM CST

Here is a link to everything you are looking for. If you have issues accessing the google drive folder I link shoot me an email. All files are solidworks files and any STL files should be the ones used in our final design.

Testing

TYLER HAUPERT - Dec 14, 2023, 2:30 PM CST

Well outlined in the final report. If you have any additional questions regarding testing contact Nick Symons.

JULIA SALITA - Dec 15, 2023, 3:38 PM CST

Final testing protocols are written out under Team Activities>Testing and Results>Protocols> *name of test* Final testing Protocol

Advisors

TYLER HAUPERT - Dec 14, 2023, 2:31 PM CST

Here I will include a list of the people our team met with for help and write a little about each of them.

Dr. John Puccinelli: Dr. P is our client and is almost certainly yours as well if you are reading this. He is a great client and is very responsive to emails. he will likely set you up with a funds account through the makerspace which is how you will buy all of your materials. Since things are going through the makerspace, make sure to order materials as early as possible to ensure you get them on time. This became an issue for our group at one point so we did buy some things ourselves so we didn't have to wait.

Dr. Brockman: He is our BME design advisor. It would be a good to have a meeting with him to get up to speed on the project and get his thoughts. One thing to note is Dr. Brockman is extremely good with microscopes and has absolutely amazing advice when it comes to testing.

Dr. Westphal: Dr. Westphal is AMAZING! You absolutely should 100% set up a meeting with him early on and talk to him about the design project and what your preliminary directions are. I honestly cannot express in words how much this man has helped our team in the two meetings we had with him.

Jesse Darley: Works in Team lab and makerspace as a design advisor. Super good resource and very good at helping with brainstorming and problem solving. Very good person to meet with and definitely gives solid, actionable advice.

Dr. Kazyak: Early in the semester when we though we were going with a different design than we did we met with Dr. Kazyak (a dynamics prof). He gave us some good advice about making dure to reinforce the shaft connecting the microscope to the knobs and also was the one ho got us in touch with Dr. Westphal.

Dr. Nimunkar: Dr. Nimunkar is a great resource and super responsive. Since you will likely be doing more software/hardware development than we did, I highly advise getting in touch and meeting with him regularly.

Misc. items and Future Directions

TYLER HAUPERT - Dec 14, 2023, 2:33 PM CST

This will likely be somewhat long and disorganized. Just going to use this page to spill the rest of my thoughts and try to cover anything I feel I didn't get to on the previous pages. I will also talk more about future directions and what I imagine you will spend your semester doing.

Future Directions:

1. The makerspace sells inserts that look like this which we used as heat set inserts, but actual heat set inserts look like this. We had issues with overtightening our set screws and having the inserts pop out, which lead to us having to refabricate the knob and stepper gears multiple times. I think that the two most likely solutions to this issue are either 1) getting the right inserts and seeing is that fixes the problem or 2) refabricating the gears in the machine shop (didn't even look into this yet, but this could be a great question for Dr. Westphal).

2. I think the heights of the tall and short side of the dual stepper mount are functional but not ideal. The files just need to be updated according to measurements and reprinted.

3. Some feature has to be added to confine the knob shaft in the open direction of the slot in the dual stepper mount. I will add my sketches to the appropriate spot in my personal folder but I'm sure you guys could come up with something simple to solve this problem.

4. If you guys end up sticking with our design, you should use the band saw and trim down the length of the GMP (the black board) so that it doesn't stick out so far from the microscope.

5. As I mentioned in the fabrication folder, I think a following group should make an adapter plate so that the GMP can be screwed into the side of the microscope instead of using velcro.

6. I think our data representation was adequate but not perfect. Looking into R, Matlab, and other resources to find new ways to analyze and present data would likely be a good use of time. I also think more tests could be conceived to paint a more complete image of how our design performs.

7. As you saw on our poster, we did not fall under the $100 budget. You should explore methods of reducing the fabrication costs to make this design at a lower price.

8. As outlined in the client requirements, Dr. P would like this design to have image stitching capabilities using the ImageJ plugin. This needs to be addressed in the coming semesters.

9. As the technology in this project develops, this need for a more clean and easy to use user interface will arise. This should incorporate the joystick, some method of moving the stage though the inputting of numbers (coordinate based? based on number of steps you are telling the stepper motors to take?)

10. One cool Idea I just had is to bind the currently dormant joystick button function to the command to take an image on the microscope screen display. Could be useful for both testing and operation applications.

Team contact Information

JULIA SALITA - Dec 15, 2023, 4:02 PM CST

Last Name	First Name	Role	E-mail	Phone	Office Room/Building
Brockman	Joshua	Advisor	jmbrockman2@wisc.edu	N/A	2146 Engineering Centers Building
Puccinelli	John	Client	john.puccinelli@wisc.edu	608-890-3573	2132 Engineering Centers Building
Haupert	Tyler	Leader	thaupert@wisc.edu	763-772-2484	
Symons	Nicholas	Communicator	nsymons@wisc.edu	920-241-9951	
Salita	Julia	BSAC	jsalita@wisc.edu	612-990-4423	
Bussey	Sawyer	BWIG	bussey2@wisc.edu	608-886-6762	
Tang	Zhaoyun/Jerry	BPAG	ztang259@wisc.edu	801-310-7422	

Project description

ZHAOYUN TANG - Dec 15, 2023, 3:08 PM CST

Course Number: BME 200/300

Project Name: Low-Cost Motorized Microscope Stage

Short Name:

Project description/problem statement:

The UW-Madison BME teaching lab currently houses two inverted fluorescent microscopes. While these contemporary pieces of equipment are functional in their current state, they leave a great deal to be desired when it comes to laboratory efficiency. Motorized alternatives do exist, however, cost continues to be a factor limiting the exposure students have to this technology. With a working budget of approximately $100, our team seeks to optimize the precision and automation of these microscopes through the creation of a novel microscope stage moving device. This design will allow for sequential, automated imaging of coordinate-based locations on slides. The creation of this device will increase the consistency of measurements, reduce the amount of time spent during data collection, and lower the learning curve for operating this equipment. To remain competitive, design prototypes should be automated in both the X and Y directions and retain high precision and accuracy in translations (1 μm resolution).

About the client: Dr. John Puccinelli

9/11/2023 - Team Meeting 1

TYLER HAUPERT - Sep 15, 2023, 6:47 PM CDT

Title: Team Meeting 1

Date: 9/15/2023

Content by: Tyler

Present: All team members

Goals: Establish roles, responsibilities, and future work that needs to be completed

Content:

Everyone:

- Please familiarize yourselves with the BME Design Page. This page has due dates, meeting times (including role-specific meeting times), and document templates to be used at various points throughout the semester. Many of these templates are also available in the “Templates” section of the shared google drive (Thanks Julia!). Julia and I will also put some relevant work from previous design courses in the “Past Examples” folder. These will be super helpful for understanding how to write in any of our deliverables. I highly recommend basing your style off of them.

- By the time you are reading this the progress report should be created and all of the “team” sections should be completed or in progress. I think it would be helpful for everyone to complete their individual sections by the end of the day so Sawyer can throw it up on the webpage and Nick can email it to the client, but these are normally due on Thursdays at 5pm.
    - Thinking about it now, we might want to wait until after the first client meeting to finalize the problem statement… we can talk about when we want this to be done by during the meeting today

- We all should also be starting research right now. This includes, but is not limited to, looking over deliverables from previous groups, independent literature reviews, patent/competing design research, standards research, and review of prior course content that may be applicable to project design.
    - All research done should be documented in your LabArchives. We have biweekly graded reviews of our labarchives. I’m not sure when the first due date for this is, but we should definitely ask Pucc about it at our first client meeting

- Our first deliverable, the Product Design Specifications, is due a week from this Friday. I hope we can have a rough draft of this done next monday by 11:59pm so that we can revise and run over it with the client without the due date looming over our heads.

- We need to finalize our problem statement. I will have a first draft by meeting time on the progress report. We should use the limited meeting time we have to discuss and revise this.

- Julia created a Questions Doc in the shared drive. If everyone could add a few things to the doc I think that would give us a good base on what we want to address during our first client meeting

- This goes hand in hand with research, but start brainstorming ideas independently. These will be super helpful for client meetings and deliverables in the future. CAD files are ideal but I think this project could be difficult to make on solidworks so drawings would be ok for now too.

- Meeting Tonight at 5pm, Friday at 12:30 (both at E Hall)

- I'm sure I missed things that will need to be addressed, if any of you (especially Julia) notice anything missing feel free to add it to this doc.

Role associated obligations:

Team Leader:

- Create, Pay for, and share lab archives
- Add previous semester Labarchives PDF(s)
- Create and fill out progress report
- Create PDS document and complete all necessary formatting

Communicator:

- Contact the client (Pucc)
    - Make first contact, introduce yourself and the team briefly and set up a meeting time (Ideally before thursday)
        - If the first progress report is done when you are making the email, include it as well

BSAC:

- First meeting this Friday @11am

BWIG:

- Add team picture to project web page
- Submit team roles (follow link on first day activities page)
- Upload first progress report to team webpage

BPAG:

- Look over BPAG resources on the BME webpage
- Make expenses spreadsheet (just copy over the template and put it in a folder in the drive, we won't have expenses for a while)
- Attend BPAG meeting on 9/29 @12:05pm

Intended Path: I think this was a first day activity but I can't remember if we did it. Decent chance Pucc will ask about it at the client meeting so just good to know where everyone stands.

Tyler: Biomaterials
Julia: Biomaterials or Biomechanics
Jerry: Biomechanics
Nick: Biomechanics
Sawyer: undecided

Conclusions/action items:

After the meeting, the team established multiple goals. Nick was to contact the client and find a time to meet prior to advisor meetings on 9/15/2023. We also agreed we wanted the PDS to be started by Wednesday (9/13/2023). In addition to this, it was discussed that everyone would continue researching, brainstorming, and documenting their work in the lab notebook.

TYLER HAUPERT - Sep 15, 2023, 6:47 PM CDT

Google Docs
Allow Google Docs access to your necessary cookies
You won't be able to access this content if necessary cookies are turned off
Learn more Allow cookies
Sign in to your Google Account
You must sign in to access this content
Sign in
Can't access your Google Account
We can't sign you in when the necessary cookies are turned off
Learn more
"); la_iframe_1702694414299.contentDocument.close();

9/25/2023 - Team Meeting 3

TYLER HAUPERT - Sep 29, 2023, 9:45 AM CDT

Title: Team Meeting 3 Notes

Date: 9/27/2023

Content by: Tyler Haupert

Present: Jerry, Tyler, Nick, Sawyer

Goals: Document details of meeting

Content:

-
    - Stage can be moved manually by pushing the stage with your hand.
        - What if we put a suction cup on the corner of the stage and moved the stage by interacting with the suction cup
            - More for proof of concept, would obviously screw in on any sort of final design
        - How could we potentially use hydraulics to push the stage-again going based on this idea of pushing the stage around rather than using the manual knob.
    - What are the previous designs/design considerations?
        - Worm drive gear system
        - Chain and sprocket
        - Meshed spur gear design
        - Replaceable stage (can't do this now)
        - Attachable gearbox
    - Designs to be developed
        - Spur gear
        - Worm drive
        - Linear rails (spur gear)
        - Linear rails (worm drive)
    - Summary:

This meeting was primarily brainstorming-oriented. Each member of the team presented novel and continuation-based ideas, and together we made decisions on which ideas required more development to be evaluated as a candidate in the design matrix. After talking and reviewing materials, the team decided our designs would drive the movement of the stage in one of two methods. The first method, the same as the method of the previous group, involves attaching gears to the manual adjustment knobs and using motors to interact with these gears and move the stage. The second idea, conceived by Nick, involved the use of rails (that we would attach to the stage) that are driven by either spur gears or a worm drive motor to physically propel the stage in a precise manner. This idea is based on the fact that when we went to the client meeting, we saw that the stage could be moved by placing our hand down and pushing it to where we wanted it. Thus, we feel this method of movement could take advantage of this feature and offer a new way of moving the stage.

After completing rough sketches on the whiteboard and making sure the team was all on the same page, each of the four members in attendance each committed to doing research on and completing drawings for one of the four designs.

- Tyler - Spur gear
- Sawyer - Worm drive
- Nick - Linear rails (spur gear)
- Jerry - Linear rails (worm drive)

  - Julia was out of attendance due to a religious observation, but has committed to making up for lost time by contributing to future team documents and deliverables.

Conclusions/action items:

This was a very productive meeting, but there is still a lot to get done today. The team needs to draw up all of the decided-upon designs, evaluate them based on the decided-upon criteria, and write explanations and justifications for each of the criteria and assigned scores. Additionally, the progress report needs to be filled out before nick sends it out on thursday.

TYLER HAUPERT - Sep 29, 2023, 9:45 AM CDT

Google Docs
Allow Google Docs access to your necessary cookies
You won't be able to access this content if necessary cookies are turned off
Learn more Allow cookies
Sign in to your Google Account
You must sign in to access this content
Sign in
Can't access your Google Account
We can't sign you in when the necessary cookies are turned off
Learn more
"); la_iframe_1702694414756.contentDocument.close();

10/2/2023 - Team Meeting 4

TYLER HAUPERT - Oct 12, 2023, 2:13 PM CDT

Title: Team Meeting 4

Date: 10/2/2023

Content by: Team

Present: Team

Goals: establish weekly goals as a team and work on preliminary presentation

Content:

TODO:

Tyler

- Slides 2 and 3 of prelim (done tonight)
- Spur gear cad design
- Dry run presentation slides (tuesday night)
    - Team presentation practice at 12 on wednesday
- Design matrix calculations
- Start prelim report

Julia Salita

- Slides 4 -whole slide and slide five- reduce word count/reword
- Worm drive cad design or redraw
- Practice presentation
- Fill out notebook more
-

Nick

- Email Dr. P to set up meeting and invite to presentation
- Meet with Dr. P
- Finish slides
- Practice presenting

Sawyer Bussey

- finish slides 8-9
- practice presentation and get a gauge for how long my sections take
- Word dump then refine/ shorten information on slides

Zhaoyun Tang

- Slides 10, 11, 12
- Practice presentation

Conclusions/action items:

Everyone now knows what they need to get done this week and what their time frame looks like. All members know they should be practicing the presentation independently to ensure it goes smoothly on friday.

TYLER HAUPERT - Oct 12, 2023, 2:13 PM CDT

Google Docs
Allow Google Docs access to your necessary cookies
You won't be able to access this content if necessary cookies are turned off
Learn more Allow cookies

Sign in to your Google Account
You must sign in to access this content
Sign in

Can't access your Google Account
We can't sign you in when the necessary cookies are turned off
Learn more
'); la_iframe_1702694415241.contentDocument.close();

10/9/2023 - Team Meeting 5

10/16/2023 - Team Meeting 6

TYLER HAUPERT - Oct 18, 2023, 5:38 PM CDT

Title: Team Meeting 6

Date: 10/16/2023

Content by: Team

Present: Julia, Nick, Sawyer, Jerry

Goals: establish what prototype, how to make it, and who's making it.

Content:

- Make cardboard model of microscope stage
    - Nick,
- Use old parts and cardboard to model the design
    - Julia get stuff from locker before class -actually did this at end of meeting, now Nick has the box
- Split into two teams
    - Fabrication of driving device
        - Sawyer
    - Development of circuitry and software
        - Nick

Conclusions/action items:

- Talk to MakerSpace about fabrication methods, like bringing in our own filament.
- Calipers and measure screw holes. And update the solidworks
- Fill out a progress report for Thursday.
- Show and tell problems:
    - Screw hole size -with weight
    - Screw hole head is small or not strong enough

JULIA SALITA - Oct 16, 2023, 8:22 PM CDT

Google Docs
Allow Google Docs access to your necessary cookies
You won't be able to access this content if necessary cookies are turned off
Learn more Allow cookies

Sign in to your Google Account
You must sign in to access this content
Sign in

Can't access your Google Account
We can't sign you in when the necessary cookies are turned off
Learn more
'); la_iframe_1702694415850.contentDocument.close();

10/18/2023 - Team Meeting 7

TYLER HAUPERT - Oct 18, 2023, 5:37 PM CDT

Title: Team Meeting 7

Date: 10/18/2023

Content by: Tyler

Present: Tyler, Sawyer, Nick

Goals: Catch Tyler up on prototyping, go over current plans and obstacles

Content:

Measurements:

Between outside diameters of screw holes: .875in

Diameter of screw hole from bottom: .3425

Diameter of screw hole from top: .12

Length of threaded hole section: .343

Length from inner diameter top hole to end of stage along y-axis .965

.845: Length from bottom inside diameter hole to end of stage along y axis

Top hole inner diameter to edge of stage on x-axis: .1415in.

.7325: Total width of both bottom stages

Top width of lower stage: .345

Bottom width of lower stage:.3875

Emails (for nick)

Hello Dr. Numinkar,

My name is Nick and I am the communicator for the BME 200/300 Motorized Microscope Stage project this semester. While looking through prior semesters' notebooks we noticed you had been collaborating with some of the previous teams on hardware and software development for this project. While our goals will be slightly different from these teams, we think your familiarity with the project could be very helpful when looking for some guidance and wisdom. We would like to find a time when a few members of our team could meet with you to go over a few questions we have come up with. We have availability both this week and next week. If you are available this thursday (tomorrow) between __ and __, this Friday from ___ to ___, or next monday sometime ___-___, please let us know. Thank you so much.

Best regards

Whatever you end with

Email 2:

Hello Dr. Puccinelli,

As you saw, we had a team meeting today getting dimensions of the microscopes to update our CAD files. During this meeting, we noticed these screws (pictures attached) that are located in holes identical to the ones we will be using to mount our design to the microscope stage in our design. With your permission, we would like to remove one of these screws to take some measurements to help identify thread size and other dimensions that would be useful during fabrication. Please let us know if you think we could remove this screw and if you would like to be present when we do it.

Best regards,

Whatever you end with

Conclusions/action items:

During today's meeting we got digital calipers and were able to make measurements on the microscope in the teaching lab. We also noticed screws on the microscope that match the dimensions of the ones we will need to use to mount the device to the stage. Following the meeting the team will be reaching out to Dr. P to discuss taking one of these screws out to take measurements on it. Additionally, we decided it would be best to schedule a meeting with Dr. Numinkar to go over project software/hardware requirements and development.

Canvas Links for Lab Training (sophomores):

Complete the following **TWO** training courses required to work in a Biosafety Level I or Level II lab at UW-Madison:

1. Complete the **Biosafety Required Training** course through Canvas self-registration: https://canvas.wisc.edu/enroll/DMWMDH

2. Complete the **Chemical Safety Training: The OSHA Lab Standard** course through Canvas self-registration: https://canvas.wisc.edu/enroll/34RGCL

After you complete & submit the quiz for **BOTH** trainings (or if you have already completed this for your lab position), go to the "Training Record Lookup Tool", enter your name, netID, OR email, navigate to the details and **save a pdf of the results** (page will show course name(s), your name, date and completion date). It takes UP TO 48 HOURS AFTER the training is completed to show up in the lookup tool.

Upload that results page HERE (and save a copy in your Training Documentation folder in your design notebook)!

11/20/2023 - Team meeting 10

NICHOLAS SYMONS - Nov 27, 2023, 5:24 PM CST

Title: Team meeting 10

Date: 11/20/2023

Content by: Nick Symons

Present: All

Goals: To get measurements of screw holes on the side of the microscope and test the microscope movement with the direct connection.

Content:

Distance between screw holes on bottom of microscope: 20 cm (from center to center)

Hole diameter: .5 cm

Height of Thread hole, from bottom of microscope to center thread: about 1.5 cm

Testing procedure:

We used the universal joint connection so that we could connect the motor to the manual knob at an angle. The joint pieces had some edges that bumped into each other at some points, so we set it up so there was as little interference as possible. This meant that the largest interval we could test on was 4000 steps before pieces started hitting each other. We couldn't get a digital caliper due to the TEAM labs holiday hours, but we did have a ruler that we could use to measure the displacement of the stage.

The top portion of the stage was started flush with the bottom portion of the stage, then the manual knob was turned 4 times by 1000 steps and then measured at the end. The distance traveled was difficult to measure due to the ruler not having very small increments, but we were still able to get the data below.

Direct Connection testing:

4000 steps = .40 cm

4000 steps = .45 cm

4000 steps = .50 cm

We then tested how far the stage would move due to directly turning the manual knob 360 degrees and 180 degrees. These were each only performed once.

360 degree turn of manual knob = 1.90 cm

180 degree turn of manual knob = .95 cm

Conclusions/action items:

Now that we've tested the direct attachment, we know that with a 1:1 gear ratio we can get approximately 1 micron resolution movement of the stage. We still need to test the repeatability of this. We'll either need to make a better universal joint or make an actual 1:1 gear connection to the knob in order to test this well.

9/15/2023 - Client Meeting 1

Title: Client Meeting 1

Date: 9/15/2023

Content by: Team

Present: Tyler, Jerry, Nick, Julia

Goals: To meet with our client and get a better understanding of the project.

Content:

Introductions:

- Tyler, Biomaterials, chose because of interest in microscopes and limited availability
- Nick, bioinstrumentation, Dr. Puccinelli was excited about this
- Jerry, biomechanics , Last to chose
- Julia, biomechanics or biomaterials , Panicked and chose because was one of only ones she had on her list still available
- Sawyer, undecided (not present)

Questions for client-

- Are there any additional requirements you would like to add that have not been a part of past design semesters requirements? Or are there any that you would like to remove or alter?
    - Smaller
    - Color
    - Weight
    - Additional function
    - Material ect.
- Is there anything that past semesters did that you did not like?
    - Design
    - Color
    - Positioning
    - Casing
    - Size
- Did last semester's group get close to what you were looking for in the product?
- Design requirements: basically just the questions on the PDS
- What are somethings that worked well in the past groups?
- May be some questions on the microscope?
- Do you want the motorized stage be powered by a battery an outlet?
- How much opportunity will there be to test our design?
- Will this be only during regular business hours?
- Is there any concern with the amount of noise that our device makes?
- Is there a possibility that the device will need to be disassembled and reassembled and or/ attached and removed from the microscope frequently?
- How do we compete with open source? Does this market research impact the viability of our project?
- Can the user interface be in arduino's IDE or would you like us to code for and create a separate part of this design to serve as a simplified UI?
- How are we supposed to use previous documentation (specifically in regards to plagiarism)?
- Do you have previous prototypes in storage somewhere?

Question Answers: questions Answers

- Are there any additional requirements you would like to add that have not been a part of past design semesters requirements? Or are there any that you would like to remove or alter?
    - There have been two previous groups

        - First group had no access to lab. Sought to interface with manual knob, rather than completely replace the existing stage. Big hurdle was manual knob moving in y direction with the stage. The following semester the mounted and attached prototype to project. We need to make sure the design does not impact functionality of the microscope (can't get in the way of turrets below stage. Spatially, it needs to be streamlined and no clumsy. There are screw holes available to be used to attach. Olympus IX71 and nikon eclipse Ti. Both use nikon elements software.
        - Wants joystick and automated control (different)
- Is there anything that past semesters did that you did not like?
    -
- Did last semester's group get close to what you were looking for in the product?
- Design requirements: basically just the questions on the PDS
- What are some things that worked well in the past groups?
    - No, not married to any of it. Motors were fairly expensive
    - Joystick? controller?
- Do you want the motorized stage to be powered by a battery an outlet?
    - Plug in
- How much opportunity will there be to test our design?
    - Contact building personnel for wiscard access to teaching lab
- Will this be only during regular business hours?
- Is there any concern with the amount of noise that our device makes?
    - Not particularly, within reasonable ranges
- Is there a possibility that the device will need to be disassembled and reassembled and or/ attached and removed from the microscope frequently?
- How do we compete with open source? Does this market research impact the viability of our project?
    - Was mostly just amazed, asked us to continue on the path of interfacing with the knob rather than replacing the stage due to concerns related to removing the stage and putting it back on.
- Can the user interface be in arduino's IDE or would you like us to code for and create a separate part of this design to serve as a simplified UI?
    - Arduino ok for proof of concept, not ideal for true functional use.
- How are we supposed to use previous documentation (specifically in regards to plagiarism)?
    - Put things in your own words. Do your best to not reference past documentation at all during the drafting of your own
- Do you have previous prototypes in storage somewhere?
    - Yes
- More Info
    - Replicate movements with error margin of 1 micron
    - Problem statement good, possibly a bit verbose
    - Obvious concerns about size and "clunkiness"
        - Main struggle with recent designs

Conclusions/action items:

The team was able to get a lot of very valuable information from the client today. We went through introductions, discussed path interests, went over the majority of our questions, and finally were able to get access to supplies and prototypes of previous teams.

TYLER HAUPERT - Sep 15, 2023, 6:44 PM CDT

Google Docs
Allow Google Docs access to your necessary cookies
You won't be able to access this content if necessary cookies are turned off
Learn more Allow cookies

Sign in to your Google Account
You must sign in to access this content
Sign in

Can't access your Google Account
We can't sign you in when the necessary cookies are turned off
Learn more
'); la_iframe_1702694416425.contentDocument.close();

10/4/2023 - Client Meeting 2

NICHOLAS SYMONS - Oct 05, 2023, 12:27 PM CDT

Title: Client Meeting 2

Date: 10/4/2023

Content by: Team

Present: Tyler, Julia, Nick

Goals: To discuss our designs and design matrix designs with the client.

Citations:

Content: We met via zoom to clarify a few aspects of our design matrix, including how some of the designs would ultimately work and why we scored the designs the way we did. We came out of this meeting with a few important points:

- We need to better communicate how our designs function and how they interface with the microscope.

- We need to include some math (i.e.. gear ratio calculations) in our design matrix to justify why we think each design will perform how we scored them.

- We could include a second design matrix to show different ways of moving the motors with the stage (direct stage attachment vs. table-top setup)

A few other things that were mentioned:

- A past group had a spec sheet for the microscope in their final notebook. Dr. P sent us a copy of this document (attached below)

- We will need to get some measurements of the space under the stage to see if there is enough room to attach the motors

Conclusions/action items: We will need to revise some parts of our design matrix by including some calculations and making clearer drawings of our designs.

NICHOLAS SYMONS - Oct 05, 2023, 12:25 PM CDT

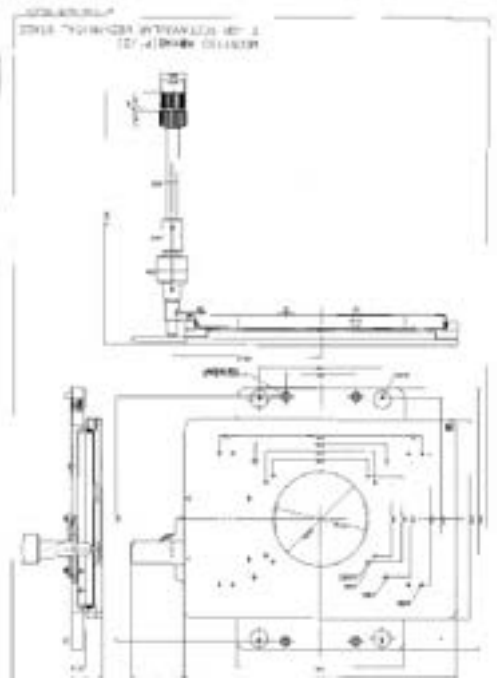

Download

Nikon_Dimensions_Sketch.pdf (60.8 kB)

9/8/2023 - Advisor Meeting 1

TYLER HAUPERT - Sep 15, 2023, 7:06 PM CDT

Title:

Date:

Content by:

Present:

Goals:

Content:

to be completed

Conclusions/action items:

9/15/2023 Advisor Meeting 2

TYLER HAUPERT - Sep 15, 2023, 7:24 PM CDT

Title: Advisor Meeting 2

Date: 9/15/2023

Content by: Tyler

Present: All members present

Goals: Meet with advisor to better understand project goals, future work, and upcoming due dates

Content:

Questions for advisor:

- **Answers in bullet points**

When is the first LabArchives due date? We struggled to find this information online

- They are due today. He will be getting to grading them within the next few days. He also made a strong emphasis that, while there are due dates, this notebook is a living document and should be updated as we work rather than at the end of a week or directly before a due date.

What are your thoughts on image splicing and how would you recommend we integrate scanning into our code for this project?

- First he explained that images are nothing more than 3-layered matrices, and math algorithms can be made to map and superimpose rapidly taken images to create one final holistic image. There are plugins available online (ImageJ) to potentially expedite this coding process, however, it could be done manually from scratch.

If there are open-source alternatives to our design that comply with most of the client requirements, what is the point of our project? How are we making a difference?

- For one, the design classes are as much about developing us as students as they are about the final designs that come out of the class. It always feels nice to create something with the potential to make a difference, but that is not necessarily required to have a positive outcome from this class. Focus on yourself and what you and your team can do for the client and good things will come.

Additional Info

- You can “hack” certain features of microscopes to unlock new functionality. Think outside of the box about how you could reengineer existing structures and aspects of these microscopes to make reaching the optimal end goal more attainable.

Due Dates coming up:

- PDS this week
- Design Matrix the following week
- Progress report 2 due thursday
- Next notebook update due in 2 weeks

Conclusions/action items:

Multiple due dates are coming up soon. First and foremost, Lab Notes are/were due today and should be up to date with current individual and team progress. The team needs to establish goals, roles, and expectations for the PDS so that it gets done in a timely manner with respectful contributions from all members.

TYLER HAUPERT - Sep 15, 2023, 7:24 PM CDT

Google Docs
Allow Google Docs access to your necessary cookies
You won't be able to access this content if necessary cookies are turned off
Learn more Allow cookies

Sign in to your Google Account
You must sign in to access this content
Sign in

Can't access your Google Account
We can't sign you in when the necessary cookies are turned off
Learn more
'); la_iframe_1702694416985.contentDocument.close();

9/29/2023 - Advisor Meeting 4

JULIA SALITA - Sep 30, 2023, 1:06 AM CDT

Title: Advisor Meeting 4

Date: 9/29/2023

Content by: Tyler and Julia Salita

Present: Team

Goals: Document advisor meeting

Content:

- We began the meeting by doing a guided review of our notebooks with Dr. Brockman
- Went over design concepts
  - Nicks CAD drawing of linear rails
  - Jerry's drawing of linear rails with a worm drive motor
  - Tyler’s drawing of the spur gear design
  - Sawyer’s drawing of the worm gear design
- Prototyping
  - Generate something physical for preliminary presentation
  - Literally use cardboard and popsicle sticks… rapid prototyping
  - 3d printing not necessary for displaying how design will operate
- PDS is a living document
- How much weight can the microscope bear
  - Will it affect focus? Z axis fluctuations…
- Also the axis for x and y translation and how they sit and cross to consider linear rails design or a version of it

Conclusions/action items:

- Generate a prototype of the stage and its movements for the preliminary presentation
- Ask for the past semesters work (the physical product that is in ECB)
- Meet with our client to make sure they agree with the design choice
- Follow up with getting access to the microscope or any that are similar on campus
- Update the PDS as necessary

TYLER HAUPERT - Sep 29, 2023, 12:46 PM CDT

Google Docs
Allow Google Docs access to your necessary cookies
You won't be able to access this content if necessary cookies are turned off
Learn moreAllow cookies

Sign in to your Google Account
You must sign in to access this content
Sign in

Can't access your Google Account
We can't sign you in when the necessary cookies are turned off
Learn more
"); la_iframe_1702694417436.contentDocument.close();

11/17/2023 Advisor Meeting

NICHOLAS SYMONS - Nov 20, 2023, 6:37 PM CST

Title: Advisor Meeting

Date: 11/17/2023

Content by: Nick

Present:

Goals: Document Advisor Meeting

Content:

- Talked about changes to the design
    - New direct connection
    - Linear rails instead of hanging from the stage
- Fabricate with wood instead of 3D printing, might be faster
- Don’t worry about fabricating with metal. We need something to present
- Worry more about getting stuff done fast than making it look good
- If we have time at the end, re-fabricate with acrylic or metal to make the design more rigid

Conclusions/action items:

- We need to start making stuff that we can bring to the poster presentation and get some kind of data to put on the poster
- Whatever we fabricate shouldn’t be pretty right away, it just has to be made

10/20/2023-Advisor Meeting

ZHAOYUN TANG - Dec 15, 2023, 3:10 PM CST

Title: Advisor Meeting

Date: 10/20/2023

Content by: Tyler

Present: Entire Team

Goals: Document Advisor Meeting

Content:

- MechE prof to contact
    - kazyak@wisc.edu
- Contact pucc regarding current team goals
- Goals
    - Tyler: Mechanical
        - Meet with me prof, work with teammates to build off of Nick's Stage CAD file to simulate 3-gear design
        - Potentially work on gear fabrication (laser cutting) once gear size and ratios are decided upon
        - Talk with sawyer and jerry to decide what we want achieved for show and tell and how we plan on presenting it
    - Nick: electrical
        - Wire the motors and drivers. Start coding the arduino
    - Jerry: Mechanical
        - Prepare for the me prof meeting
        - Research on gears
        - Plan with tyler and sawyer for show and tell
    - Julia: electrical
        - Help arduino coding
        - Set up meeting with Nick to work on code and wiring
        - 12v 4 amp power adapter
    - Sawyer: Mechanical:
        - Gear ratio research
        - Create a list of questions to be asked for ME professor regarding spur gear design (What issues we might face, how they would go about setting up gears, issues with resistance to torque, where we should mount the device.)
        -

Conclusions/action items:

- Questions to ask ME PROF:
    - Issues regarding screws all in one line on the underside of the microscope stage

10/13/2023-Advisor Meeting

ZHAOYUN TANG - Dec 15, 2023, 3:11 PM CST

Title: Advisor Meeting

Date: 10/13/2023

Content by: Tyler

Present: Entire Team

Goals: Document Advisor Meeting

Content:

- We began the meeting by doing a guided review of our notebooks with Dr. Brockman
- Went over design concepts
    - Nicks CAD drawing of linear rails
    - Jerry's drawing of linear rails with a worm drive motor
    - Tyler’s drawing of the spur gear design
    - Sawyer’s drawing of the worm gear design
- Prototyping
    - Generate something physical for preliminary presentation
    - Literally use cardboard and popsicle sticks… rapid prototyping
        - 3d printing not necessary for displaying how design will operate
- PDS is a living microscope
- How much weight can the microscope bear
    - Will it affect focus? Z axis fluctuations…
- Also the axis for x and y translation and how they sit and cross to consider linear rails design or a version of it

Conclusions/action items:

- Generate a prototype of the stage and its movements for the preliminary presentation
- Ask for the past semesters work (the physical product that is in ECB)
- Meet with our client to make sure they agree with the design choice
- Follow up with getting access to the microscope or any that are similar on campus
- Update the PDS as necessary

10/25/2023-Advisor Meeting

ZHAOYUN TANG - Dec 15, 2023, 3:12 PM CST

Title: Advisor Meeting

Date: 10/25/2023

Content by: Julia

Present: Entire Team

Goals: Document Advisor Meeting

Content:

- Start prototyping as soon as possible so that we have something to start testing
- Get out of theoretical stage

Conclusions/action items:

- Set up meeting with Dr. Puccinelli

9/19/2023 - Meeting with Dr. Nimunkar

TYLER HAUPERT - Oct 19, 2023, 2:04 PM CDT

Title: Team Meeting 7

Date: 10/19/2023

Content by: Tyler

Present: Tyler, Nick

Goals: Talk to Dr. Nimunkar about prior groups work, our goals, and ways to achieve what we have in mind in a reasonable timeframe.

Content:

Questions to ask:

- Is there a better way to connect the drivers to power? The previous group's solution seems dangerous and very temporary.
- Is the power cord from the previous group enough to power the motors? Cord supplies 1 amp but the motors are rated at 1.68 amps each.

Answers:

- Splice, solder and heat wrap the wires for the wall plugin.
- Microstepping and gear reductions both options
- Proof of concept most important for one semester, make things useful for future group
    - Direct connection, ignoring resolution needs, to perfect hardware and software so future groups can focus on later segments of the project
- Meet with ME prof regarding gears and structural parts of the design

After meeting with Nimunkar:

Tyler:

- Measured mounting screw on microscope
    - NOTE: measurements are in inches, but screw is in metric (dumb I know)
    - Screw head: #3 metric hex wrench
    - Length: 0.623 inches
    - Head diameter: 0.279 inches
    - Thread diameter: 0.159 inches
    - Thread size: 4mm x 70
    - Big washer diameter (washer closest to threads): 0.3065 inches
    - Little washer diameter: 0.2595 inches

Nick:

- Went to MakerSpace to investigate using team funds to purchase an adapter to connect wall outlet plugin to the 2 stepper motors that will be used in our design
- Link for adapter on amazon: (insert here nick)
- Still need to talk so fab fellows about purchasing one through the makerspace so we can use team funds

Conclusions/action items:

Logistics

Set up meetings with MechE faculty to discuss design of gear system and structural components. Following that meeting, schedule a meeting with Dr. P to discuss new plans and directions for the semester. Schedule a team meeting for tonight or friday with everyone present to lay out all that needs to get done prior to show and tell and make sure everyone knows what they should be doing to contribute to group success.

Action items

Talk to Fab Fellows about ordering adapters. Make CAD file for piece that will directly connect stepper motor to one of the knobs to show proof of concept for show and tell (no gears in this design). Brainstorm at team meeting how we plan on fabricating show and tell prototype and then assign roles to all team members. Consider making second design matrix for software/hardware components on final report.

9/15/2023 - PDS

Title: PDS

Date: 9/15/2023

Content by: Team

Present: All

Goals: Complete PDS

Content:

PRODUCT DESIGN SPECIFICATIONS: MICROSCOPE LOW COST MOTORIZED STAGE

September 22, 2023

BME 300/200

Clients: Dr. John Puccinelli

Advisor: Dr. Joshua Brockman

Team Members:

Team Leader: Tyler Haupert

Communicator: Nicholas Symons

BWIG: Sawyer Bussey

BPAG: Jerry Zhaoyun

BSAC: Julia Salita

Function:

The inverted fluorescence microscopes of the UW-Madison BME Teaching Lab are manually controlled microscopes that allow users to observe and collect data on cell and tissue culture. While the technology exists to convert these microscopes into motorized and automated devices, it is very expensive and beyond the budget of the school. The client, Dr. John Puccinelli, has requested the fabrication of a device to serve as a solution to this problem. The final working prototype should include mechanical, software, and hardware components to allow for the automation of manual inverted fluorescence microscopes. The physical structures of this device will interface with the manual adjustment knob on the right-hand side of the microscope. It will be capable of moving the stage in a coordinate-based fashion in both the X and Y directions. Software elements will be created to direct the movement of the stage. Finally, the client has also requested the development of software to process and stitch input images to add a scanning feature to the microscopes.

Client Requirements:

1. The device must be a motorized mechanism that controls the stage movement through the manual stage adjustment knobs.
2. The stage should be movable by using a joystick, computer keys, or by inputting values into the user interface.
3. The movements of the stage should be precise down to the micron range, with acceptable deviations within one order of magnitude.
4. The software created must be integrated into the existing NIS-elements software and assist in both taking images of the field of view and stitching them together.
5. The device will be powered by the wall outlets in the lab.
6. The project must remain under a final cost of 100 US dollars.

Design Requirements:

1. Physical and Operational Characteristics:

a. *Performance Requirements:*

. The device should be able to adjust the microscope stage in both the x-axis and the y-axis using the manual adjustment knobs

. The software must be able to participate in image sequencing and be easy to use

. The field of view should be movable by using an interfaced joystick or computer keys such as the keypad arrows

b. Safety

i. The device should not be hazardous.

ii. The device should not harm the user in any way, including electrical shock[1], physical pinching, or loud sound levels.

iii. The device should not damage the microscope while ensuring smooth operation.

iv. The cords of the device should be safely arranged so that it does not block off the user’s workspace. Moreover, the cords should not be placed near or be in contact with any liquid.

v. Labeling

	Signifies that the main plug must be disconnected from the wall outlet prior to maintenance [2].
	Indicates that the equipment labeled is suitable for the use of alternating current only [3].
	Specifies that the operator's manual should be referenced and used during use of device [4].

c. Accuracy and Reliability

i. The device should have a movement resolution of 1µm.

ii. The movements should be repeatable without having to recalibrate the device.

d. Life in Service

i. The device should be reliable and last at least 10 to 15 years [5].

ii. The stepper motors have a lifetime of 20,000 hours[6], which translates to 2,500 8 hour work days or 500 5 day work weeks. This matches our requirement of a 10-15 year lifetime.

iii. The device should not break easily and withstand daily wear and tear.

iv. The device should be capable of undergoing regular sanitation via autoclaving and/or harsh cleaning chemicals.

e. Shelf Life

i. To ensure the longevity of the device while stored, the device should be kept dry and at regular room temperature and pressure.

ii. All materials used for the device should be stable at standard lab temperature and humidity conditions.

iii. The device should be able to be stored either attached or detached from the microscope at normal room conditions.

f. Operating Environment

i. The laboratory will be kept within a temperature range of 20-25 degrees celsius with a relative humidity of 35-50 percent [7].

ii. The device will be kept in the BME teaching lab and should be able to operate in the above conditions.

g. Ergonomics

i. The device must be small and not disrupt the normal operation of the Nikon TI-U and Olympus IX71 microscopes.

ii. The software must be operable with the nikon elements software and must have a user-friendly interface.

h. Size

i. The device should take little to no table space next to the microscope.

ii. Ideally, the entire device should be encased to minimize device interference and malfunction due to exposure.

i. *Weight*

i. The device should be lightweight to minimize interference and damage to the function of the microscope.

ii. Weight should not limit usage and accessibility of the microscopes for all users.

j. Materials

i. All materials purchased, altered, and used must comply with the guidelines for a biosafety level 1 laboratory listed in the Biosafety in Microbiological and Biomedical Laboratories (BMBL) 6th Edition [8] by the Centers for Disease Control and Prevention (CDC) [9].

ii. 3D printing should be utilized to print most plastic prototypes using the FDM and FFF printing methods [10], [11].

iii. The Universal ILS9.150D [12] laser cutter will be used to accurately cut precise pieces necessary for maintaining accuracy of movement of the microscope stage.

iv. Soldering [13] may be used to stabilize the electronic connections within the necessary circuitry.

v. All included materials must be resistant to the degradative effects of harsh chemicals used for regular sanitization of lab equipment.

vi. Plastic gears should be used rather than metal gears to eliminate the need for lubricant, this would decrease the amount of maintenance needed in order to keep the device operational [14]. Additionally, plastic materials will also help to lower cost.

vii. Plastic materials expand and lose structure at increasing temperatures. Thus, material choice should consider the rate at which different plastic materials heat or cool.

viii. Materials used for gears should be made out of a plastic with a low thermal diffusivity, which is defined as the thermal conductivity ratio to the specific heat capacity of the material. Materials of large Thermal Diffusivity will respond quickly to changes in heat and Materials of low Thermal Diffusivity will respond slowly [15]. Thermal Diffusivity of PVC (7.8E-6 m^2/s) [16], this is a low Thermal Diffusivity meaning the material heats up slowly. The equation for this value is: =k/pCp

1. a= thermal diffusivity
2. k= material conductivity
3. p=density of material

4. Cp=specific heat of material

k. Aesthetics, Appearance, and Finish

i. The device should not be distracting to the user.

ii. The final product should be neat and blend in with surrounding equipment.

iii. All edges should be smooth and not pose a threat to users operating the device.

2. Product Characteristics

a. Quantity:

. Only one device will be manufactured for the client

. The device should be replicable in order to produce additional products if necessary or to potentially be mass produced.

b. Target Product Cost:

i. The target budget is to remain under a total of $100 for the final cost of the device.

ii. The allocated budget for development is $300.

iii. The team should use previously purchased materials to keep costs low and reduce waste, however, the team should present the final total price to reflect the total cost if the device is to be replicated.

3. Miscellaneous

a. Standards and Specifications

. All aspects of the device's design must comply with the many guidelines provided by the CDC for biosafety level 1 laboratories [8].

. The device should follow all guidance outlined in the FDA's "Chemical, Metals, Natural Toxins & Pesticides Guidance Documents & Regulations" to ensure safety and producibility should the device be reproduced [17].

. The following standards are to be referenced and used as guidelines throughout the development and implementation electrical systems designs [18].

01 Standard: Quality Management System.

001 Standard: Environmental Management System.

C Standard: System and Organisation Controls

001 Standard: Information Security Management.

001 Standard: Occupational Health and Safety Management System.

002 Standard: Complaint Management Systems

PR Standard: General Data Protection Regulation

b. Customer

i. While the team's client has a sole interest in the design, there is a potential for a more broad potential application of our design. If fabrication methods can be simplified and streamlined, it is likely that many universities and budget-aware labs would be keen to utilize our low-cost solution to the problem of motorizing and automating manual microscopes.

c. Patient-Related Concerns

i. The device should not inflict any danger to the surrounding users and equipment

ii. This device should be capable of undergoing regular maintenance and cleaning with harsh chemicals [8].

iii. No paper, cardboard, or other organic materials should be utilized in the final design.

d. Competition

i. The OpenFlexture project is an open-sourced, 3-D printable microscope that can be created and constructed for approximately $200, with multiple stages available to add motorized and automated functionality [19].

ii. One example of market-available motorized stages is Zaber's ASR series motorized XY microscope stages [20].

1. While these are functional, accurate to within 12 μm, and available, they do not meet client criteria due to cost and the way they interact with the microscope.

iii. Detailed in a 2017 article, a group of German-based scientists created an automated, motorized, 3-D printed inverted fluorescence microscope. The article includes all necessary CAD and software files for construction, as well as a step-by-step instruction manual to aid users in building their device [21].

References:

[1] "LBNL Electrical Safety Manual.pdf." Accessed: Sep. 22, 2023. [Online]. Available: https://www2.lbl.gov/ehs/pub3000/CH08/LBNL%20Electrical%20Safety%20Manual.pdf

[2] "ISO 7010 - M006, Disconnect mains plug from electrical outlet." https://www.iso.org/obp/ui#iso:grs:7010:M006 (accessed Sep. 22, 2023).

[3] "IEC 60417 - 5032, Alternating current." https://www.iso.org/obp/ui#iec:grs:60417:5032 (accessed Sep. 22, 2023).

[4] "ISO 7000 - 1641, Operator's manual; operating instructions." https://www.iso.org/obp/ui#iso:grs:7000:1641 (accessed Sep. 22, 2023).

[5] R. Pieper, S. Schini, and J. Cohn, "BME 400: Biomedical Engineering Design".

[6] "Nema 17 Stepper Motor L=40mm Gear Ratio 100:1 MG Series Planetary Gearbox - 17HS15-1584S-MG100|STEPPERONLINE." https://www.omc-stepperonline.com/nema-17-stepper-motor-l-40mm-gear-ratio-100-1-mg-series-planetary-gearbox-17hs15-1584s-mg100 (accessed Sep. 22, 2023).

[7] "download.pdf." Accessed: Sep. 22, 2023. [Online]. Available: https://www.fda.gov/media/73912/download

[8] "Biosafety in Microbiological and Biomedical Laboratories (BMBL) 6th Edition | CDC Laboratory Portal | CDC," Feb. 03, 2021. https://www.cdc.gov/labs/BMBL.html (accessed Sep. 20, 2023).

[9] M. L. Bayot and K. C. King, "Biohazard Levels," in *StatPearls*, Treasure Island (FL): StatPearls Publishing, 2023. Accessed: Sep. 20, 2023. [Online]. Available: http://www.ncbi.nlm.nih.gov/books/NBK535351/

[10] "FDM vs. FFF: Differences and Comparison | Xometry." https://www.xometry.com/resources/3d-printing/fdm-vs-fff-3d-printing/ (accessed Sep. 20, 2023).

[11] "3D Print Guide – UW Makerspace – UW–Madison." https://making.engr.wisc.edu/3d-printing-the-makerspace/ (accessed Sep. 20, 2023).

[12] "Laser Cutters," *UW Makerspace*. https://making.engr.wisc.edu/laser-cutters/ (accessed Sep. 20, 2023).

[13] "Electronics – UW Makerspace – UW–Madison." https://making.engr.wisc.edu/electronics/ (accessed Sep. 20, 2023).

[14] “Experimental tests to predict plastic gears’ lifetime | Gear Solutions Magazine Your Resource to the Gear Industry,” Dec. 15, 2019. https://gearsolutions.com/features/experimental-tests-to-predict-plastic-gears-lifetime/ (accessed Sep. 22, 2023).
[15] “Thermal Diffusivity | Definition | nuclear-power.com,” *Nuclear Power*. https://www.nuclear-power.com/nuclear-engineering/heat-transfer/thermal-conduction/heat-conduction-equation/thermal-diffusivity/ (accessed Sep. 22, 2023).
[16] E. B. Ettah, J. G. Egbe, S. A. Takim, U. P. Akpan, and E. B. Oyom, “Investigation of the Thermal Conductivity of Polyvinyl Chloride (Pvc) Ceiling Material Produced In Epz Calabar, For Application Tropical Climate Zones”.
[17] C. for F. S. and A. Nutrition, “Chemical, Metals, Natural Toxins & Pesticides Guidance Documents & Regulations,” *FDA*, Jun. 01, 2023. https://www.fda.gov/food/guidance-documents-regulatory-information-topic-food-and-dietary-supplements/chemical-metals-natural-toxins-pesticides-guidance-documents-regulations (accessed Sep. 22, 2023).
[18] “ISO Certification for Electrical and Electronic | ISO 9001, 14001, 45001,” *SIS Certifications*. https://www.siscertifications.com/electrical-and-electronic/ (accessed Sep. 22, 2023).
[19] “The OpenFlexure project.” https://openflexure.org/ (accessed Sep. 21, 2023).
[20] “ASR Series - Motorized Microscope Stages, XY - Zaber.” https://www.zaber.com/products/scanning-microscope-stages/ASR (accessed Sep. 21, 2023).
[21] D. Schneidereit, L. Kraus, J. C. Meier, O. Friedrich, and D. F. Gilbert, “Step-by-step guide to building an inexpensive 3D printed motorized positioning stage for automated high-content screening microscopy,” *Biosens. Bioelectron.*, vol. 92, pp. 472–481, Jun. 2017, doi: 10.1016/j.bios.2016.10.078.

Conclusions/action items:

As seen below, the team has started the creation of our Fall 2023 Product Design Specifications. Updates to this document are soon to come.

TYLER HAUPERT - Sep 15, 2023, 5:39 PM CDT

Google Docs
Allow Google Docs access to your necessary cookies
You won't be able to access this content if necessary cookies are turned off
Learn more Allow cookies
Sign in to your Google Account
You must sign in to access this content
Sign in
Can't access your Google Account
We can't sign you in when the necessary cookies are turned off
Learn more
"); la_iframe_1702694418290.contentDocument.close();

9/29/2023 - Design Matrix

TYLER HAUPERT - Sep 29, 2023, 9:49 AM CDT

Title: Design Matrix

Date: 9/29/2023

Content by: Team

Present: Team

Goals: Evaluate all preliminary designs

Content:

- Will be uploaded when finished, google doc available below

Conclusions/action items:

Upon completion, the team should begin the process of creating our preliminary presentation. Any prototyping that could be completed prior to the first presentation would be massively helpful for presenting our ideas next Friday.

TYLER HAUPERT - Sep 29, 2023, 9:50 AM CDT

Google Docs
Allow Google Docs access to your necessary cookies
You won't be able to access this content if necessary cookies are turned off
Learn more Allow cookies
Sign in to your Google Account
You must sign in to access this content
Sign in
Can't access your Google Account
We can't sign you in when the necessary cookies are turned off
Learn more
"); la_iframe_1702694418740.contentDocument.close();

10/4/2023 - Preliminary Presentation

TYLER HAUPERT - Oct 13, 2023, 11:34 PM CDT

Title: Preliminary presentation

Date: 10/4/2023

Content by: Team

Present: Team

Goals: Document completion of Preliminary Presentation

Content:

See PDF below

Conclusions/action items:

The team has now completed and delivered the preliminary presentation. future efforts should go towards the generation of the preliminary report.

TYLER HAUPERT - Oct 13, 2023, 11:31 PM CDT

Download

Motorized_Microscope-Preliminary_Presentation-9_29_2023_1_.pdf (1.02 MB)

10/13/2023 - Preliminary Report

Title: Preliminary Report

Date: 10/13/2023

Content by: Team

Present: Team

Goals: Document completion of preliminary report

Content:

Preliminary Report: Microscope Low Cost Motorized Stage

October 13, 2023

BME 300/200

Clients: Dr. John Puccinelli

Advisor: Dr. Joshua Brockman

Team Members:

Team Leader: Tyler Haupert

Communicator: Nicholas Symons

BWIG: Sawyer Bussey

BPAG: Jerry Zhaoyun Tang

BSAC: Julia Salita

Abstract:

Inverted fluorescence microscopes are a highly utilized piece of laboratory equipment used in life sciences research. Manually controlled versions of these microscopes are much cheaper than the market-available motorized alternatives, but are not as ideal for teaching and high-throughput research scenarios. The client, Dr. Puccinelli, has tasked the team to create a device capable of adding motorization, automation, and image sequencing capabilities to these microscopes. An account with funds to the amount of $100 has been created through the UW-Madison MakerSpace to aid in the fabrication of a final design. The created device will be generated through fabrication methods centered mainly around 3D printing and laser cutting. This prototype will control the movements of the microscopes stage by manipulating the hanging manual control knobs. This semester's team hopes to improve upon previous designs by redesigning the gearing configuration and changing the mounting methods of the prototype. Current proposed testing methods are aimed towards assessing the accuracy of the movements of the stage and the potential impact of the design’s weight on the focus of the microscope. Data analysis of quantifiable success metrics will allow for a precise assessment of success as defined by the PDS-outline requirements of this design. The team is currently in the fabrication phase of the design process, with hopes to have the first iteration of the prototype completed in time for BME show and tell on November 3rd.

Table of Contents:

Abstract: 1
1. Introduction 3
1.1 Motivation/Global and/or Societal Impact 3
1.2 Current Competing Designs 3
1.3 Problem Statement 4
2. Background 5
2.1: Background Research 5
2.2: Design Research 6
2.3: Client Information 7
2.4: Design Specifications 7
3. Preliminary Designs 8
3.1: Spur Gear Design 8
3.3: Linear Rails Design 9
4. Preliminary Design Evaluation 11
4.1: Design Matrix 11
4.2: Design Matrix Criteria Explanations 11
4.3: Design Matrix Evaluations 12
5. Fabrication/Development Process 14
5.1: Materials 14
5.2: Methods 15
5.2(a): Stage Movement Device Fabrication 15
5.3: Initial Prototyping and Testing 16
6. Discussion 17
7. Conclusion 18
8. References 19
9. Appendix 20
9.1: Product Design Specifications 20
9.2: Design Matrix 30
9.3: Material Rationale 36
9.4: Solidworks Files 37

1. Introduction

1.1 Motivation/Global and/or Societal Impact

Motorized stage microscopes are commonly used in the biological research community. The motorized stage is crucial due to its pivotal role in enhancing precision, efficiency, and the quality of research. Motorized stages facilitate the rapid and precise execution of advanced imaging methods like time-lapse image stitching. Nevertheless, microscopes equipped with motorized stages typically come at a considerably higher cost compared to their manual counterparts. This imposes a significant obstacle to the accessibility of the motorized stage microscopes, especially for budget-constrained and teaching laboratories. Therefore, creating an affordable motorized microscope stage is motivated by expanding accessibility and availability to a broader audience. Embracing a cost-effective design that eliminates financial barriers, ensuring more accessible access to this technology. This enhances the overall experience for students and staff utilizing the Biomedical Engineering teaching lab. Furthermore, the integration of image sequencing capabilities into the motorized microscope stage will notably enhance its versatility, making it more robust for applications in both teaching and research.

1.2 Current Competing Designs

Currently, the market offers several commercial motorized stage replacements for conventional microscopes. These products come from established microscopy manufacturers and typically provide advanced motorized stage capabilities. While these options often deliver high performance, they are associated with an extremely high price, which is not feasible. For example, the non-motorized fluorescent microscope that is currently used in the BME teaching lab is a Nikon TI-U, and a brand new motorized version of this microscope is around $70,000-$80,000 [1]. Due to the high cost of the commercial motorized stage, people have come up with lower-cost solutions.

One of these solutions is an open-source project called the Openstage, which is a three-axis drive motorized stage system and a stand-alone controller unit [2]. The performance of this stage is close to and potentially better than those commercial options that are many times its price. Its accuracy in the X and Y directions is 1μm or better. The motion of the stage can be controlled through either a handheld controller or a program. Moreover, the controller software is very flexible and can be easily modified. However, some drawbacks of this design are that the project's total cost amounts to approximately $1000, which is still relatively high. Additionally, this design is too bulky to completely satisfy client needs (Appendix 9.1).

Another competing design is the Openflexture Delta Stage [3]. In this design, the stage is 3D printed, and the base of the stage houses the electronic components, which are powered using a Raspberry Pi. The stage can move in the X, Y, and Z axis using three stepper motors. This design is compact and suitable for a laboratory bench or microbiological safety cabinet. The price of this stage is around $336, which is more acceptable than the previous two options.

Figure 1: Openflexture Delta Stage [3].

1.3 Problem Statement

The UW-Madison BME teaching lab currently houses two inverted fluorescent microscopes. While these contemporary pieces of equipment are functional in their current state, they leave a great deal to be desired when it comes to laboratory efficiency. Motorized alternatives do exist. However, cost continues to be a factor limiting the exposure students have to this technology. With a working budget of approximately $100, our team seeks to optimize the precision and automation of these microscopes through the creation of a novel microscope stage moving device. This design will allow for sequential, automated imaging of coordinate-based locations on slides. The creation of this device will increase the consistency of measurements, reduce the amount of time spent during data collection, and lower the learning curve for operating this equipment. To remain competitive, design prototypes should be automated in both the X and Y directions and retain high precision and accuracy in translations (1 μm resolution).

2. Background

2.1: Background Research

The BME Teaching Lab at UW-Madison houses, amongst many other pieces of equipment, two inverted fluorescence microscopes-one of which can be seen in *figure 2*. The “inverted” in the name is due to the flipped arrangement of certain parts of the microscope relative to what is normally seen. These microscopes house an objective lens above the stage, with a condenser and light source located below the stage [4]. In addition to an altered arrangement of componentry, inverted fluorescence microscopes also have a unique imaging mechanism that utilizes fluorescent dyes. Dyes are placed within the sample by researchers and excited through the use of a halogen lamp. Differences between input and output emission are used to generate high resolution imagery of things like living cells and tissue culture [5].

Figure 2: Nikon TI-U inverted fluorescence microscope used in the BME Teaching Lab [6].

The advantageous imaging capabilities of these microscopes have garnered them a lot of attention within the scientific community. In specific, these microscopes have very popular applications in the realm of life sciences laboratory research [7].

High throughput has always been the goal, but reaching that goal in a cost effective manner has continued to be an elusive pursuit. Motorization of inverted microscopes, in general, can be achieved through one of two mechanisms. The first, and most obvious, option is buying a microscope designed for motorized microscopy with motorized, rather than manual, stage-driving mechanisms built in. Unfortunately, however, this easy decision incurs heavy financial setbacks, with motorized inverted fluorescence microscopes selling for several thousand to several hundred thousand dollars [8]. The second option involves the

modification of a manual inverted fluorescence microscope to add features such as motorization, automation, and/or imaging sequencing software. Many of these options are still very costly [9], but there is more room for thrifty solutions within this category through the use of external motors, 3D printed parts, and other low cost manufacturing methods.

Two groups prior to ours have attempted to motorize the manual inverted fluorescence microscopes by attaching gears to the control knobs and manipulating them through gears powered by stepper motors. Each of these teams had their own flaws, which is to be expected when attempting to take on a task such as this within the time frame of one semester. The hope is to use the basics of their projects in a potentially more robust arrangement to create a superior iteration of this design.

2.2: Design Research

Current areas of the design being targeted for improvement can be aptly categorized into changes concerning the gearing configuration and changes concerning the spatial arrangement of the design. While this categorization can assist in the delegation of fabrication roles within in the team setting, it is worth noting that these two aspects are very much intertwined, with gear sizes, gear locations, and the number of gears all having considerable effects on how the overall design can be spatially arranged to integrate into the existing mechanical structures of the microscope.

The main considerations when assessing the category of gearing configurations is the speed, resolution, and spatial use of the various designs. All previously conceived designs have used a 2-gear system, with a gear attached to a stepper motor driving the movements of a secondary gear that is fixed to the manual control knobs. With the primary endpoint of micron-resolution movements, previous groups were able to calculate gearing dimensions using the equation found in *figure 3* [10]. Keeping compactness in mind, gearing configurations using three, or potentially even more, gears could be fabricated to achieve that same gearing ratio with much smaller gears. Three gear designs contain a driver gear, an idler gear, and a follower gear. In this system, the driver-idler and idler-follower gear ratios have a multiplicative effect, which would allow the design to utilize much smaller gears. Although some time would have to be spent perfecting this new gearing system, the space being saved warrants it.

$$\text{First Gear Diameter} = \frac{\text{Total Gear Diameter}}{[1 - (\text{Motor Step Angle} / 1\ \mu\text{m Knob Angle})]^2}$$

Figure 3: Equation from previous design team used to calculate gear dimensions used in a 2-gear system [10].

Now having brought up the topic of the spatial use of our design, a few comments should be made to address why this factor has received so much consideration within the initial stages of our design process. During the first client meeting Dr. Puccinelli made it very clear that, while previous designs did get some things right, their use of the space on the lab counter was suboptimal and due for improvement. The most recent design team made a rail system that the stepper motors were mounted to to allow them to travel with the stage in the Y direction. This system was successful for proof of concept, but cluttered the user spaces around the microscopes and is not super practical real-world applications. Design considerations have involved the use of multi-gear designs to reduce gear dimensions and allow for the motors and gears to be mounted to the right hand underside of the microscope. The structures connected to the microscope will have to not interfere with stage travel or other use-related aspects of the microscope, so cross referencing with the schematics of the microscope will be necessary during generation of CAD files [11].

2.3: Client Information

The client, Dr. John Puccinelli, is the Associate Chair of the Undergraduate Program and Associate Teaching Professor for University of Wisconsin-Madison Department of Biomedical Engineering. He oversees the BME Teaching Lab in ECB 1002 and is responsible for the purchasing and management of all equipment inside. Dr. Puccinelli has tasked our team with the creation of a device to motorize and automate the inverted fluorescence microscopes in the teaching lab to offer a more robust teaching and research experience to biomedical engineering students and staff at UW-Madison.

2.4: Design Specifications

Through collaboration between the client and our team, a Product Design Specifications document was created. This document can be found in its entirety in section 9.1 of the appendix, but will also be touched on here. Our client requested that this device motorize the stage of the microscopes with a maximum fabrication budget of $100. This device must be easily attachable and detachable so it can be used as an accessory, rather than being permanently integrated into the microscope's design. Final prototypes of this semester should be capable of moving the stage of the microscope as directed and be accurate to within a micron (1 μm) of the intended movement input by the user. Inputs from the user should either be directed by a joystick integrated into the circuit or by inputting coordinate-based locations into a user interface (UI) the team would create. The client would be satisfied with inputting these values into the arduino IDE for proof of concept and testing, but would like a more streamlined UI in a final design. This design, at Dr. Puccinelli's request, will interact with the preexisting manual control knob of the microscope. This knob is located very close to many other mechanical structures of the microscope. With this in mind, designs should be compact and modeled in a way such that they won't interfere with functions of the microscope when attached.

3. Preliminary Designs

3.1: Spur Gear Design

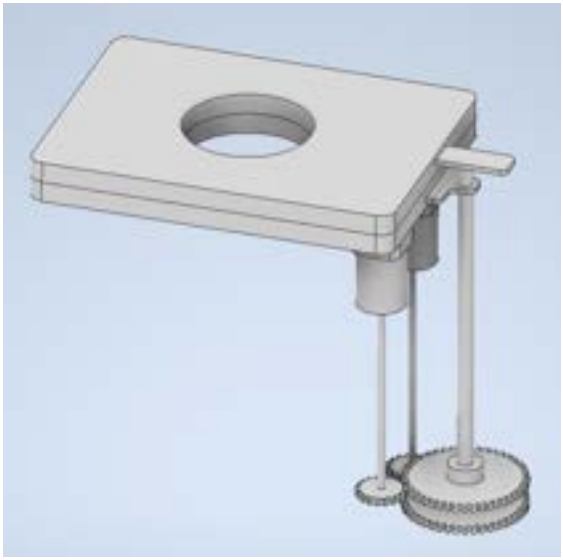

Figure 4: Spur Gear Design

The spur gear design is attached directly under the stage and interacts with the existing control knob. In this design each motor is directly connected to a spur gear. When it rotates, its horizontal alignment and connection with a spur gear would move the control knob to turn, thereby moving the stage in the X and Y direction. The main advantage of this design is that it reduces the size of the device and the space it occupies on the countertop.

3.2: Worm Drive Design

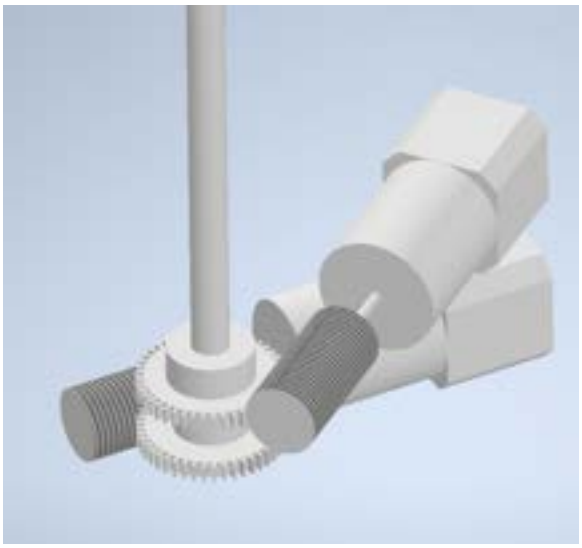

Figure 5: Worm Drive Design

The worm drive design interfaces with the existing manual control knob in order to move the stage. In this design, the manual knob will have spur gears added so that the worm gears can turn the knob. The worm gears will be placed on top of one another to reduce the amount of space used and will be angled so they can easily mesh with their respective spur gear.

3.3: Linear Rails Design

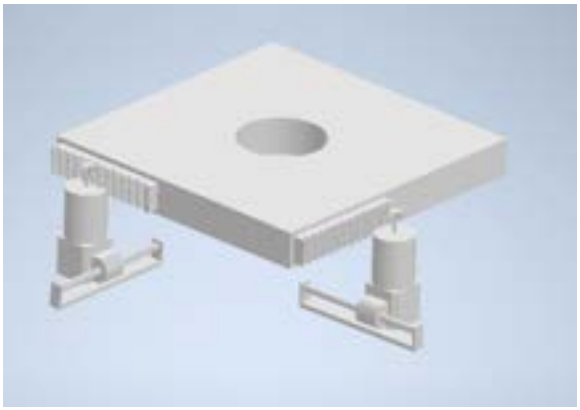

Figure 6: Linear Rail Design

The last design has many major differences to the previous designs. The linear rail design uses stepper motors to directly move the stage. It accomplishes this by having a spur gear on each stepper motor and linear gears attached to the stage. The spur gears can then move the stage by moving the linear gears. In order to keep the spur gear in contact with its linear gear when the stage is moving, there are linear rails attached to each stepper motor. These linear rails let the motor freely move with the stage.

4. Preliminary Design Evaluation

4.1: Design Matrix

Table 1: Design matrix for stage movement designs

Design Categories (Weight)	**Design 1: Spur Gears**		**Design 2: Worm Drive**		**Design 3: Linear Rails**	
Performance (30)	4/5	24	3/5	18	5/5	30
Cost (20)	4/5	16	4/5	16	3/5	12
Mechanical Integration (17.5)	5/5	15	4/5	12	2/5	6
Ease of Fabrication (15)	4/5	12	4/5	12	3/5	9
Size (12.5)	4/5	8	5/5	10	5/5	10
Safety (5)	4/5	8	4/5	8	5/5	10
Total Points:	83		76		77	

4.2: Design Matrix Criteria Explanations

The following criteria were created by the team to evaluate each of the designs in a holistic manner based on requirements detailed in the Product Design Specifications (Appendix 9.1).

Performance of the motorized microscope stage is evaluated on the design's capability to adjust the stage in the x and y axis consistently, precisely, and efficiently. This category is scored the highest in the design matrix due to the high sensitivity, accuracy, and compatibility the client requests. Specific considerations for this evaluation are outlined in the *Performance Requirements* section of the PDS.

Cost is evaluated on the total price of the materials and associated fabrication costs, such as machinery use fees. Cost is ranked higher in the design matrix due to the client's emphasis on remaining under budget and allowing the project to be accessible

for those of all economic backgrounds. The total expenses should aim to remain under $100, as outlined in the *Cost* section of the PDS.

Mechanical Integration assesses how effectively the device interacts with the microscope's structural and mechanical elements, considering factors such as the microscope's limited surface area and where the device is mounted. As stated in the PDS's *Size, Weight, Ergonomics, and Spatial Configuration* sections, the device should be light, compact, and not interfere with existing mechanical structures of the microscope.

The Ease of Fabrication category evaluates how easily the device will be able to be fabricated, along with how easy it is for other people to replicate the design in the future. The considered factors are outlined in the *quantity* section of the PDS. This category is less important because although this creates a design that can be easily reproduced by others, the main objective is to make a solution for the BME teaching lab specifically. Therefore, while still being considered, it is not ranked as highly as other metrics in the design matrix.

The Size category considers the final product's physical dimensions within the workspace of the microscope. It is preferred to have a compact product to meet the limitations of a small laboratory area, which puts these criteria at the fourth-highest weight in the evaluation process. Moreover, the product should be relatively small so it does not hinder the operator within the workspace, as stated in the *Size, Ergonomics, Aesthetics, Appearance, and Spatial Configuration* sections of the PDS.

Finally, as all our design concepts utilize electrical power sourced from the teaching lab's wall outlets, inherent safety concerns are associated with each potential prototype. Therefore, the safety category focuses on the potential risks posed to users during the operation of the device, as detailed in the *Safety* section of the PDS.

4.3: Design Matrix Evaluations

Regarding performance, the Linear Rail design scored the highest out of the three designs. This is because the linear rail design is directly attached to the stage. Interacting with the stage will make the device more accurate and precise and leave less room for errors. Both the Spur Gear design and the Worm Drive design move the stage by interacting with the existing control knob, which will require a lot of calibration and testing in order for them to be as accurate as the Linear Rail design.

For the cost category, both the Spur Gear and Worm Drive designs have received the highest score. Compared to the Linear Rail design, these two designs are much simpler and require less materials to fabricate. Furthermore, all the parts to fabricate are relatively simple and come from methods such as 3D printing and laser cutting, which are relatively inexpensive. The Linear Rail design has a lower score, primarily due to the higher expenses associated with its fabrication and materials. Due to the complex nature of the Linear Rail design, some components will need to be purchased instead of fabricated, which significantly raises the cost.

The Spur Gear design has scored the highest in the mechanical integration category. due to the simplicity of the design as well as the relatively low interference with the stage and the area under the stage. Spur gears are very simple to work with and will be easy to mount on the cylindrical control knobs of the microscope. The Worm Drive design received a lower score due to issues with combining both spur gears and worm gears. The Linear Rail design scored the lowest because of the possible interference it could have with the stage and other components of the microscope as it bypasses the manual control knobs and moves the stage directly, which may cause it to limit the stage’s movement.

Considering the simplicity of the two designs, the Spur Gear and Worm Drive both score the highest in the ease of fabrication category. These two designs have fewer moving parts compared to the Linear Rail design, which is one of the reasons they scored higher in this category. Fewer steps are needed to fabricate the device for these two designs. Moreover, both the Worm Drive and Spur Gear designs have been fabricated by previous groups. This means that information on how to fabricate them can be gained by looking through previous groups' works and notebooks. Furthermore, it is certain that the Spur Gear and Worm Drive designs can be successfully fabricated because of the work done by previous groups. The Linear Rail design is entirely new, and it is uncertain what fabrication methods are needed in order to complete a physical product. There are no notes or experiences from previous groups that can be used as reference, making it a lot harder to fabricate compared to the Spur Gear and Worm Drive design. As for the size category of the design matrix, both the Worm Drive and the Linear Rails were awarded the highest score. Given their tendency to provide a more compact structure in contrast to the Spur Gear design, these two designs scored slightly higher. This compactness is particularly important when considering the size category due to the limited space for the microscope setup in the BME teaching lab. Moreover, Spur gears can have larger gear diameters, potentially interfering with adjacent equipment or the operator's workspace.

For safety considerations, the Linear Rail design was the most secure option. All three designs are reasonably safe, but safety does have to be considered because the device is powered by the lab’s wall outlets. The Spur Gear and Worm Drive designs scored

slightly lower on safety due to the positioning of the device. These two devices are attached to the manual control knob, where the person will have to come in close contact to operate the microscope. This orientation of these two designs increases the possibility of an injury, such as pinching, to the operator of the microscope.

5. Fabrication/Development Process

5.1: Materials

The low cost motorized stage adjustment device consists of several components that will be created from several different materials. The main components that are involved in this design are the gears mounted on the microscope manual control knobs, the gear shafts from both stepper motors to both gears on the control knobs, the housing unit for the stepper motors, an arduino board and stepper motor driver, as well as screws to secure the device to the underside of the microscope stage.

The material of the stepper motor casing needed to be something that would be mildly resistant to heat due to the possibility of stepper motors running at over 100°C [12]. However, this temperature is usually from constant use within 3d printers, and the device won't be quite as active and therefore will result in a lower temperature, but a material with a higher softening point is still necessary to preserve structural integrity. Standard PLA filament begins to soften and warp at around 50°C which will decrease the strength of the casing, especially if it is supporting the hanging weight of the stepper motor on the underside of the microscope stage [13]. Therefore, the material that should be utilized due to its physical strength and heat resistance is Polycarbonate. PC has the ability to withstand temperatures of up to 110°C without warping which exceeds the temperature that the stepper motors would be able to reach at maximum performance [16]. At the moment, the quantity of Polycarbonate listed below is purely theoretical, and when fabrication begins this value may go up or down.

Previous Groups have utilized laser cut Acrylic for their gears, however, despite the benefits of acrylic as a material, the makerspace laser cutter only permits a certain width of gear to be cut. This is because too thick of certain materials begin to have issues on the laser cutter as it is not able to effectively cut through them past a certain depth, in the case of acrylic, it is limited to a depth of a ¼". Instead, the decision has been made to make our Gears out of Nylon filament. Using Nylon filament allows the 3d printing of the gears, which in turn enables the gears to be much thicker. Thicker gears allow for more surface area to make contact, and this will overall improve the efficiency and performance of the device. Nylon is also a very heat resistant material, meaning it will begin to warp at higher temperatures than PLA or Tough PLA would. This heat resistant property stays true to the requirements set by the PDS (Appendix 9.1) Nylon has the ability to withstand 160°C without warping, which may be useful due to friction between the gears. Also, Nylon has the benefit of not requiring lubricant which is ideal for continuous use and low maintenance [15].

There are also a few other components that the team won't be manufacturing but will still be included in the design, the first of which includes screws that will be used to attach the device to the underside of the stage via the available screw holes on the microscope. The screws listed below are roughly the size of the necessary screws needed to complete this project, so the price will be very similar, however the team was not able to get precise measurements using a dial caliper due to complications with the team lab as well as not having access to the teaching lab. The arduino board, arduino breadboard, stepper motor driver, and the stepper motor have all been passed into the current team's inheritance from previous groups as listed below. The stepper motors will enable rotation of the fabricated gears. The bread board, arduino board, and stepper motor driver will allow for the application of the software to our stepper motors.

Table 2: Materials and costs

Component	**Material Type**	**Quantity**	**Price/Unit**
Stepper motor casing	Polycarbonate	150 Grams	$.12 per Gram $18
Control Knob spur gears	Nylon	100	$15

Screws	#6-32 ¼” UNC Screw	8 Pack	$1.64
Arduino Board	Arduino Board	1	$10(previous group)
Stepper Motor	Nema 17 Stepper motors	2	$28(previous group)
Bread Board	Bread Board	1	$3(previous group)
Stepper motor driver	Stepper Motor Driver Nema TB6600 boards	1	$19.96(Previous group)
			Total: $95.6

5.2: Methods

At this point, there are no finalized fabrication methods, however, a plan on how to start approaching fabrication of the device is being formed.

<u>5.2(a): Stage Movement Device Fabrication</u>

1. 3D printed parts:
    a. 3D print motor brackets, electronics housing, and manual knob attachment parts using Polycarbonate. Slicer settings can be set to 20% infill, 0.16 mm layer height, and a 0.4 mm nozzle.
    b. 3D Print Nylon Spur gears to be mounted on manual control knobs
    c. Remove supports and clean any rough edges with a file and/or sandpaper.

The stepper motors should be attached to their brackets, then the brackets can be attached to the 4 available screw holes on the bottom and side of the stage. The manual knob attachment parts and gears can be added next. Make sure that the amount of horizontal movement in the manual knob is minimized as much as possible while leaving the rotational movement unhindered. The drive rod and spur gears can now be attached to the stepper motors. The spur gears should line up and stay meshed even when they are turning. Next, the motor wires need to be connected to the stepper drivers which in turn must be connected to the arduino.

5.3: Initial Prototyping and Testing

While physical prototyping hasn’t begun yet, 3D models that depict the design have been made and plans for testing have been established. Some of the established testing procedures are as follows:

1. Performance: Determining both accuracy and repeatability of the stage movement over a lengthy testing period. Previous groups had issues with their systems losing accuracy as they tested. There are a few tests that could be performed:
    a. A microscope stage calibration grid could be used by noting how far the lines move in the field of view as the stage is moved by the device. This setup would be able to test for both the repeatability and accuracy of movement.
    b. Another option is to have a slide with fluorescent beads of a known diameter which can be put in the field of view. The starting position of the beads would be noted, then the device could move the stage a set distance and the position of the beads could be noted again.

2. Deflection of stage: The weight of the device should not tilt the stage sideways. Even a few microns of movement could cause problems when focussing on a sample. This will be very important to test because the stepper motors are fairly heavy. A counterweight may be needed on the opposite side of the stage if the motors and other parts are too heavy. In order to test the deflection of the stage, an object would have to be brought into focus on one side of the field of view and moved to the other side of the field of view. If the object is then blurry, then it can be assumed that the stage is not level and a counterweight may need to be added to the opposite side of the stage from the hanging motors.

6. Discussion

The team was tasked with creating a motorized stage that moves in the X and Y directions with micron mechanical positioning, with an allocated budget of $100 or less. The motorized device should also possess image sequencing capabilities, interface with nikon elements software, and integrate with any type of positioning device such as a joystick.

Creating a cost effective motorized microscope stage allows for multiple benefits. An inexpensive price point allows resources to be more widespread. Instead of only being able to purchase one motorized stage, multiple could be made or purchased which utilizes less of a budget to allow for additional resources to be purchased. The possible smaller budget allocation also allows for a more equal opportunity to have the same learning tools. Smaller schools or individualized research could benefit from a motorized stage but may not be able to have one due to budget constraints. In addition, creating a custom design for the microscope allows for specialized mechanical integration, such as the motorized stage being controlled by the manual knobs and not a replacement stage. Another benefit is that the design does not require the permanent or semi-permanent alteration of the microscope.

Currently all motorized stages cost thousands of dollars, such as Zaber’s motorized stage [9], and are not easily removed should the manual knobs need to be used. Creating an inexpensive motorized stage that does not require intense set up or removal will save time and resources. Also, image sequencing and ultimately image stitching allows for a wider scope view and for a wider view which carries more depth [14].

The Spur gear design hangs from the stage and uses multiple spur gears attached to motors and the manual control knobs as pictured above in section 3.1, *Figure 4*. The design minimizes the devices occupied space while allowing for it to manipulate both directional knobs. Since the spur gear design is directly attached to the stage less parts will need to be fabricated to support the design due to the support being moved to the stage. However, this design is not without faults. One major area of concern is the slack the manual knobs have. The device can only be as accurate as the knobs can be. Should the knobs only be able to move the stage 10 micrometers at once the device will not be able to move the stage more finely. Additionally, slippage between the gear and the control knob or even the two gears can occur which messes with the gear ratios, torque, and turnage of the design. Additional problem solving or design analysis is necessary to determine how to eliminate or reduce the design's faults.

One benefit of creating a low cost motorized microscope page is the boost of inclusivity it creates. The motorization of the stage allows for those with limited movement to better use the microscope because they are able to use the integrated joystick which should only require limited movement. Effects of other limitations such as tremors, which affect one's steadiness in positioning, impaired vision, and more can also be mitigated by the mechanical positioning of the device. As previously stated, the lower cost of the motorized microscope stage will allow for a more widespread access to learning tools to advance the knowledge of students who attend universities or schools with a restricted budget.

Additionally, the stage will most likely not make the use of the microscope more safe. The device does have the potential to cause harm to the operator. However, the risk of the deceive causing harm is rather low. To limit the potential harm of the circuitry the wires should all be permanently attached to the breadboard and other circuitry elements such as the arduino. Additionally, the circuitry will be looked over by and tested with at least one expert in the field to assure there is limited possibility of injury. There is

also a slight concern of pinching should someone place their fingers near the gears. In the future a casing unit could be fabricated to place over the device to eliminate the possibility of an injury.

7. Conclusion

The team is currently in the fabrication phase of this project. Having made decisions on the current directions of the designs, fabrication may begin. Due to an unexpected loss of access to ECB our team was unable to access the microscopes for an extended period of time. Thus, the team is actively taking measurements of the microscopes to update roughly-created CAD files. Upon finalization, these files will be used to 3D print, laser cut, and test various parts of our prototypes.

Future work for the project includes finalization of fabrication protocols, defining and testing success metrics for our prototypes, and the development of an image sequencing software system. Later phases of this project will attempt to integrate the software and hardware elements of this design once they have both been fabricated and validated independently of each other. All fabrication steps should be capable of being done within the MakerSpace and TEAM lab spaces of UW-Madison. In the coming weeks the team hopes to collaborate with several staff members at UW-Madison to develop a capable first prototype to be presented at show and tell on November 3rd of this year.

8. References

[1] "Nikon Ti-U Inverted Fluorescence Motorized Microscope Pred Ti2 - AV." Accessed: Oct. 13, 2023. [Online]. Available: https://www.bostonind.com/nikon-ti-u-inverted-fluorescence-motorized-microscope-pred-ti2-av

[2] R. A. A. Campbell, R. W. Eifert, and G. C. Turner, "Openstage: A Low-Cost Motorized Microscope Stage with Sub-Micron Positioning Accuracy," *PLOS ONE*, vol. 9, no. 2, p. e88977, Feb. 2014, doi: 10.1371/journal.pone.0088977.

[3] S. McDermott *et al.*, "Multi-modal microscopy imaging with the OpenFlexure Delta Stage," *Opt. Express*, vol. 30, no. 15, pp. 26377–26395, Jul. 2022, doi: 10.1364/OE.450211.

[4] "Inverted Fluorescent Microscope," Conduct Science. Accessed: Oct. 13, 2023. [Online]. Available: https://conductscience.com/lab/inverted-fluorescent-microscope/

[5] K. Thorn, "A quick guide to light microscopy in cell biology," *Mol. Biol. Cell*, vol. 27, no. 2, pp. 219–222, Jan. 2016, doi: 10.1091/mbc.E15-02-0088.

[6] "BME Lab - 1002 ECB - Biomedical Experimental Teaching Lab." Accessed: Oct. 13, 2023. [Online]. Available: https://sharedlab.bme.wisc.edu/labs/1002/

[7] "Upright and Inverted Microscopy | Theory and Applications | ibidi." Accessed: Oct. 13, 2023. [Online]. Available: https://ibidi.com/content/212-inverted-and-upright-microscopy

[8] M. A. Schaefer, H. N. Nelson, J. L. Butrum, J. R. Gronseth, and J. H. Hines, "A low-cost smartphone fluorescence microscope for research, life science education, and STEM outreach," *Sci. Rep.*, vol. 13, no. 1, Art. no. 1, Mar. 2023, doi: 10.1038/s41598-023-29182-y.

[9] "ASR Series - Motorized Microscope Stages, XY - Zaber." Accessed: Sep. 21, 2023. [Online]. Available: https://www.zaber.com/products/scanning-microscope-stages/ASR

[10] "Stepper Motors Calculator." Accessed: Oct. 13, 2023. [Online]. Available: https://zalophusdokdo.github.io/StepperMotorsCalculator/en/index.html

[11] "ECLIPSE Ti Series," Nikon Instruments Inc. Accessed: Oct. 13, 2023. [Online]. Available: https://www.microscope.healthcare.nikon.com/products/inverted-microscopes/eclipse-ti-series

[12] "How hot is too hot? – ORBITER PROJECTS." Accessed: Oct. 09, 2023. [Online]. Available: https://www.orbiterprojects.com/how-hot-is-too-hot/

[13] "PLA vs ABS vs Nylon." Accessed: Oct. 13, 2023. [Online]. Available: https://markforged.com/resources/blog/pla-abs-nylon

[14] "Best 3D Printer Filament: The Main Types in 2023," All3DP. Accessed: Oct. 13, 2023. [Online]. Available: https://all3dp.com/1/3d-printer-filament-types-3d-printing-3d-filament/

[15] R. Plastics, "Why Machined Plastic Gears Are Superior to Metal - Reading Plastic," Precision Plastic Machining, Die Stamping, Custom Plastics & More. Accessed: Oct. 13, 2023. [Online]. Available: https://readingplastic.com/machined-plastic-gears/

[16] "What's an Image Sequence? - Endcrawl Help Site." Accessed: Oct. 13, 2023. [Online]. Available: https://help.endcrawl.com/article/109-what-is-image-sequence-dpx-tiff

9. Appendix

9.1: Product Design Specifications

PRODUCT DESIGN SPECIFICATIONS: MICROSCOPE LOW COST MOTORIZED STAGE

September 22, 2023

BME 300/200

Clients: Dr. John Puccinelli

Advisor: Dr. Joshua Brockman

Team Members:

Team Leader: Tyler Haupert

Communicator: Nicholas Symons

BWIG: Sawyer Bussey

BPAG: Jerry Zhaoyun

BSAC: Julia Salita

Function:

The inverted fluorescence microscopes of the UW-Madison BME Teaching Lab are manually controlled microscopes that allow users to observe and collect data on cell and tissue culture. While the technology exists to convert these microscopes into motorized and automated devices, it is very expensive and beyond the budget of the school. The client, Dr. John Puccinelli, has requested the fabrication of a device to serve as a solution to this problem. The final working prototype should include mechanical, software, and hardware components to allow for the automation of manual inverted fluorescence microscopes. The physical structures of this device will interface with the manual adjustment knob on the right-hand side of the microscope. It will be capable of moving the stage in a coordinate-based fashion in both the X and Y directions. Software elements will be created to direct the movement of the stage. Finally, the client has also requested the development of software to process and stitch input images to add a scanning feature to the microscopes.

Client Requirements:

1. The device must be a motorized mechanism that controls the stage movement through the manual stage adjustment knobs.
2. The stage should be movable by using a joystick, computer keys, or by inputting values into the user interface.
3. The movements of the stage should be precise down to the micron range, with acceptable deviations within one order of magnitude.
4. The software created must be integrated into the existing NIS-elements software and assist in both taking images of the field of view and stitching them together.
5. The device will be powered by the wall outlets in the lab.
6. The project must remain under a final cost of 100 US dollars.

Design Requirements:

1. Physical and Operational Characteristics:

a. *Performance Requirements:*

. The device should be able to adjust the microscope stage in both the x-axis and the y-axis using the manual adjustment knobs

. The software must be able to participate in image sequencing and be easy to use

. The field of view should be movable by using an interfaced joystick or computer keys such as the keypad arrows

b. Safety

i. The device should not be hazardous.

ii. The device should not harm the user in any way, including electrical shock [1], physical pinching, or loud sound levels.

iii. The device should not damage the microscope while ensuring smooth operation.

iv. The cords of the device should be safely arranged so that it does not block off the user's workspace. Moreover, the cords should not be placed near or be in contact with any liquid.

v. Labeling

	Signifies that the main plug must be disconnected from the wall outlet prior to maintenance [2].
	Indicates that the equipment labeled is suitable for the use of alternating current only [3].
	Specifies that the operator's manual should be referenced and used during use of device [4].

c. Accuracy and Reliability

i. The device should have a movement resolution of 1µm.

ii. The movements should be repeatable without having to recalibrate the device.

d. Life in Service

i. The device should be reliable and last at least 10 to 15 years [5].

ii. The stepper motors have a lifetime of 20,000 hours[6], which translates to 2,500 8 hour work days or 500 5 day work weeks. This matches our requirement of a 10-15 year lifetime.

iii. The device should not break easily and withstand daily wear and tear.

iv. The device should be capable of undergoing regular sanitation via autoclaving and/or harsh cleaning chemicals.

e. Shelf Life

i. To ensure the longevity of the device while stored, the device should be kept dry and at regular room temperature and pressure.

ii. All materials used for the device should be stable at standard lab temperature and humidity conditions.

iii. The device should be able to be stored either attached or detached from the microscope at normal room conditions.

f. Operating Environment

i. The laboratory will be kept within a temperature range of 20-25 degrees celsius with a relative humidity of 35-50 percent [7].

ii. The device will be kept in the BME teaching lab and should be able to operate in the above conditions.

g. Ergonomics

i. The device must be small and not disrupt the normal operation of the Nikon TI-U and Olympus IX71 microscopes.
ii. The software must be operable with the nikon elements software and must have a user-friendly interface.

h. Size

i. The device should take little to no table space next to the microscope.
ii. Ideally, the entire device should be encased to minimize device interference and malfunction due to exposure.

i. *Weight*

i. The device should be lightweight to minimize interference and damage to the function of the microscope.
ii. Weight should not limit usage and accessibility of the microscopes for all users.

j. Materials

i. All materials purchased, altered, and used must comply with the guidelines for a biosafety level 1 laboratory listed in the Biosafety in Microbiological and Biomedical Laboratories (BMBL) 6th Edition [8] by the Centers for Disease Control and Prevention (CDC) [9].
ii. 3D printing should be utilized to print most plastic prototypes using the FDM and FFF printing methods [10], [11].
iii. The Universal ILS9.150D [12] laser cutter will be used to accurately cut precise pieces necessary for maintaining accuracy of movement of the microscope stage.
iv. Soldering [13] may be used to stabilize the electronic connections within the necessary circuitry.
v. All included materials must be resistant to the degradative effects of harsh chemicals used for regular sanitization of lab equipment.
vi. Plastic gears should be used rather than metal gears to eliminate the need for lubricant, this would decrease the amount of maintenance needed in order to keep the device operational [14]. Additionally, plastic materials will also help to lower cost.
vii. Plastic materials expand and lose structure at increasing temperatures. Thus, material choice should consider the rate at which different plastic materials heat or cool.
viii. Materials used for gears should be made out of a plastic with a low thermal diffusivity, which is defined as the thermal conductivity ratio to the specific heat capacity of the material. Materials of large Thermal Diffusivity will respond quickly to changes in heat and Materials of low Thermal Diffusivity will respond slowly [15]. Thermal Diffusivity of PVC (7.8E-6 m^2/s) [16], this is a low Thermal Diffusivity meaning the material heats up slowly. The equation for this value is: =k/pCp

1. a= thermal diffusivity

2. k= material conductivity
3. p=density of material
4. Cp=specific heat of material

k. Aesthetics, Appearance, and Finish

i. The device should not be distracting to the user.
ii. The final product should be neat and blend in with surrounding equipment.
iii. All edges should be smooth and not pose a threat to users operating the device.

l. Spatial Configuration

i. The device should not hinder or block movement of the existing mechanical components of the microscope
ii. The device should be secure and stable on the points that it mounts to the microscope.
1. Ex. screw holes, clamp points, adhesion points.

2. Product Characteristics

a. Quantity:

. Only one device will be manufactured for the client
. The device should be replicable in order to produce additional products if necessary or to potentially be mass produced.

b. Target Product Cost:

i. The target budget is to remain under a total of $100 for the final cost of the device.
ii. The allocated budget for development is $300.
iii. The team should use previously purchased materials to keep costs low and reduce waste, however, the team should present the final total price to reflect the total cost if the device is to be replicated.

3. Miscellaneous

a. Standards and Specifications

. All aspects of the device's design must comply with the many guidelines provided by the CDC for biosafety level 1 laboratories [8].
. The device should follow all guidance outlined in the FDA's "Chemical, Metals, Natural Toxins & Pesticides Guidance Documents & Regulations" to ensure safety and producibility should the device be reproduced [17].
. The following standards are to be referenced and used as guidelines throughout the development and implementation electrical systems designs [18].

01 Standard: Quality Management System.
001 Standard: Environmental Management System.
C Standard: System and Organisation Controls

)01 Standard: Information Security Management.

)01 Standard: Occupational Health and Safety Management System.

)02 Standard: Complaint Management Systems

)PR Standard: General Data Protection Regulation

b. Customer

i. While the team's client has a sole interest in the design, there is a potential for a more broad potential application of our design. If fabrication methods can be simplified and streamlined, it is likely that many universities and budget-aware labs would be keen to utilize our low-cost solution to the problem of motorizing and automating manual microscopes.

c. Patient-Related Concerns

i. The device should not inflict any danger to the surrounding users and equipment

ii. This device should be capable of undergoing regular maintenance and cleaning with harsh chemicals [8].

iii. No paper, cardboard, or other organic materials should be utilized in the final design.

d. Competition

i. The OpenFlexture project is an open-sourced, 3-D printable microscope that can be created and constructed for approximately $200, with multiple stages available to add motorized and automated functionality [19].

ii. One example of market-available motorized stages is Zaber's ASR series motorized XY microscope stages [20].

1. While these are functional, accurate to within 12 µm, and available, they do not meet client criteria due to cost and the way they interact with the microscope.

iii. Detailed in a 2017 article, a group of German-based scientists created an automated, motorized, 3-D printed inverted fluorescence microscope. The article includes all necessary CAD and software files for construction, as well as a step-by-step instruction manual to aid users in building their device [21].

References:

[1] "LBNL Electrical Safety Manual.pdf." Accessed: Sep. 22, 2023. [Online]. Available: https://www2.lbl.gov/ehs/pub3000/CH08/LBNL%20Electrical%20Safety%20Manual.pdf

[2] "ISO 7010 - M006, Disconnect mains plug from electrical outlet." https://www.iso.org/obp/ui#iso:grs:7010:M006 (accessed Sep. 22, 2023).

[3] "IEC 60417 - 5032, Alternating current." https://www.iso.org/obp/ui#iec:grs:60417:5032 (accessed Sep. 22, 2023).

[4] "ISO 7000 - 1641, Operator's manual; operating instructions." https://www.iso.org/obp/ui#iso:grs:7000:1641 (accessed Sep. 22, 2023).

[5] R. Pieper, S. Schini, and J. Cohn, "BME 400: Biomedical Engineering Design".

[6] "Nema 17 Stepper Motor L=40mm Gear Ratio 100:1 MG Series Planetary Gearbox - 17HS15-1584S-MG100|STEPPERONLINE." https://www.omc-stepperonline.com/nema-17-stepper-motor-l-40mm-gear-ratio-100-1-mg-series-planetary-gearbox-17hs15-1584s-mg100 (accessed Sep. 22, 2023).

[7] "download.pdf." Accessed: Sep. 22, 2023. [Online]. Available: https://www.fda.gov/media/73912/download

[8] "Biosafety in Microbiological and Biomedical Laboratories (BMBL) 6th Edition | CDC Laboratory Portal | CDC," Feb. 03, 2021. https://www.cdc.gov/labs/BMBL.html (accessed Sep. 20, 2023).

[9] M. L. Bayot and K. C. King, “Biohazard Levels,” in *StatPearls*, Treasure Island (FL): StatPearls Publishing, 2023. Accessed: Sep. 20, 2023. [Online]. Available: http://www.ncbi.nlm.nih.gov/books/NBK535351/
[10] “FDM vs. FFF: Differences and Comparison | Xometry.” https://www.xometry.com/resources/3d-printing/fdm-vs-fff-3d-printing/ (accessed Sep. 20, 2023).
[11] “3D Print Guide – UW Makerspace – UW–Madison.” https://making.engr.wisc.edu/3d-printing-the-makerspace/ (accessed Sep. 20, 2023).
[12] “Laser Cutters,” *UW Makerspace*. https://making.engr.wisc.edu/laser-cutters/ (accessed Sep. 20, 2023).
[13] “Electronics – UW Makerspace – UW–Madison.” https://making.engr.wisc.edu/electronics/ (accessed Sep. 20, 2023).
[14] “Experimental tests to predict plastic gears’ lifetime | Gear Solutions Magazine Your Resource to the Gear Industry,” Dec. 15, 2019. https://gearsolutions.com/features/experimental-tests-to-predict-plastic-gears-lifetime/ (accessed Sep. 22, 2023).
[15] “Thermal Diffusivity | Definition | nuclear-power.com,” *Nuclear Power*. https://www.nuclear-power.com/nuclear-engineering/heat-transfer/thermal-conduction/heat-conduction-equation/thermal-diffusivity/ (accessed Sep. 22, 2023).
[16] E. B. Ettah, J. G. Egbe, S. A. Takim, U. P. Akpan, and E. B. Oyom, “Investigation of the Thermal Conductivity of Polyvinyl Chloride (Pvc) Ceiling Material Produced In Epz Calabar, For Application Tropical Climate Zones”.
[17] C. for F. S. and A. Nutrition, “Chemical, Metals, Natural Toxins & Pesticides Guidance Documents & Regulations,” *FDA*, Jun. 01, 2023. https://www.fda.gov/food/guidance-documents-regulatory-information-topic-food-and-dietary-supplements/chemical-metals-natural-toxins-pesticides-guidance-documents-regulations (accessed Sep. 22, 2023).
[18] “ISO Certification for Electrical and Electronic | ISO 9001, 14001, 45001,” *SIS Certifications*. https://www.siscertifications.com/electrical-and-electronic/ (accessed Sep. 22, 2023).
[19] “The OpenFlexure project.” https://openflexure.org/ (accessed Sep. 21, 2023).
[20] “ASR Series - Motorized Microscope Stages, XY - Zaber.” https://www.zaber.com/products/scanning-microscope-stages/ASR (accessed Sep. 21, 2023).
[21] D. Schneidereit, L. Kraus, J. C. Meier, O. Friedrich, and D. F. Gilbert, “Step-by-step guide to building an inexpensive 3D printed motorized positioning stage for automated high-content screening microscopy,” *Biosens. Bioelectron.*, vol. 92, pp. 472–481, Jun. 2017, doi: 10.1016/j.bios.2016.10.078.

9.2: Design Matrix

DESIGN MATRIX: MICROSCOPE LOW COST MOTORIZED STAGE

September 29, 2023

BME 300/200

Clients: Dr. John Puccinelli

Advisor: Dr. Joshua Brockman

Team Members: Team Leader: Tyler Haupert Communicator: Nicholas Symons BWIG: Sawyer Bussey BPAG: Jerry Zhaoyun Tang BSAC: Julia Salita

Design Matrix

Design Categories (Weight)	**Design 1: Spur Gears**		**Design 2: Worm Drive**		**Design 3: Linear Rails** 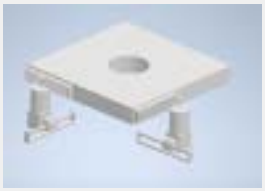	
Performance (30)	4/5	24	3/5	18	5/5	30
Cost (20)	4/5	16	4/5	16	3/5	12
Mechanical Integration (17.5)	5/5	15	4/5	12	2/5	6
Ease of Fabrication (15)	4/5	12	4/5	12	3/5	9
Size (12.5)	4/5	8	5/5	10	5/5	10
Safety (5)	4/5	8	4/5	8	5/5	10
Total Points:	83		76		77	

Designs:

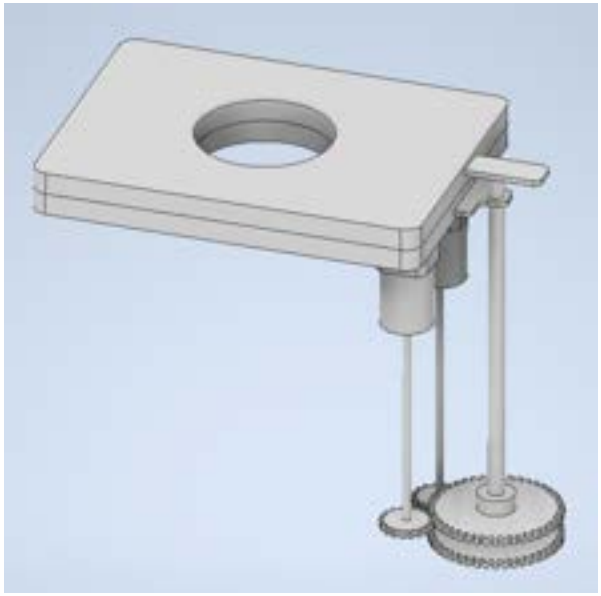

Figure 1: Spur gears design.

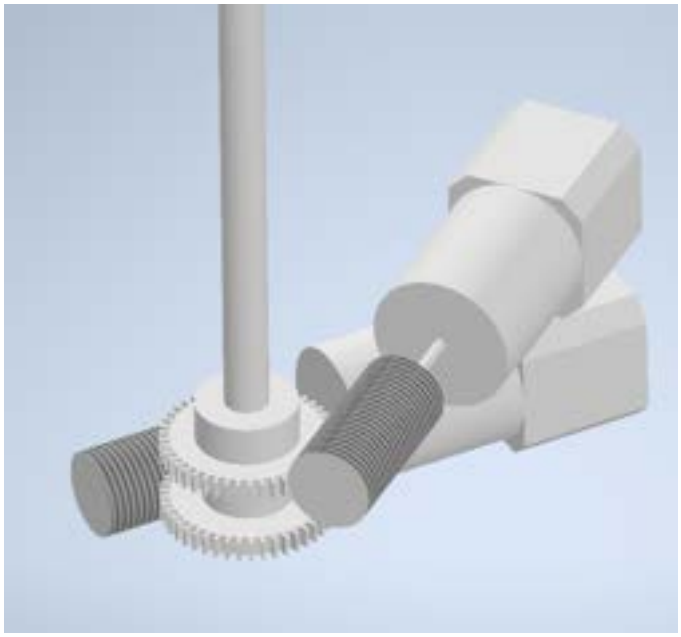

Figure 2: Worm gear design.

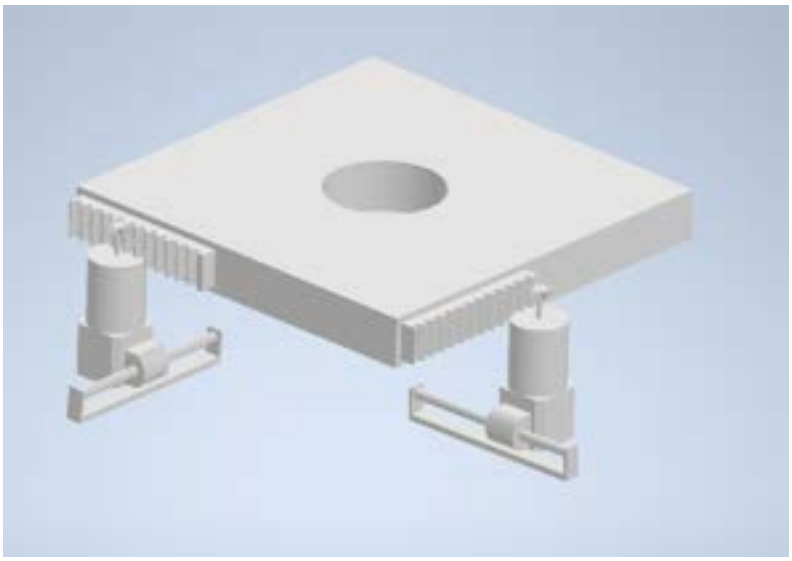

Figure 3: Linear rails design

Determination of Criteria and Weights: Collaboratively the team generated 6 evaluation criteria that were determined to give the most accurate representation of each design's overall practicality. Each of the criteria serve to score these designs based on the previously documented Product Design Specifications (PDS).

Performance:

The performance criteria of the Motorized Microscope design matrix is representative of the proposed design's ability to modulate the position of the stage in a consistent, precise, efficient manner. Factors considered in this evaluation are outlined in the *Performance Requirements* section of the PDS (Appendix 9.1).

Cost:

The cost category is scored based on the expenses of the materials as well as any additional costs associated with the use of machinery for fabrication of the final product.The score for this criteria is ranked high in the design matrix compared to other categories because one of the project's main goals is to create the device for an affordable price. The materials and fabrication of the device should remain under or close to $100 as outlined in the cost section of the PDS (Appendix 9.1).

Mechanical Integration:

Mechanical Integration is based on how efficiently the device interacts with the structure and mechanical components of the Microscope. It takes into account the limited surface area of the microscope as well as the restricted screw thread hole locations for mounting the device. This criteria evaluates the *Size, Weight, Ergonomics* and *Spatial Configuration* sections of the PDS (Appendix 9.1).

Ease of Fabrication:

The ease of fabrication category is based on how easily we would be able to fabricate the design along with how easily other groups of people would be able to recreate our design. We considered factors outlined in the *quantity* section of the PDS (Appendix 9.1). This category's score is ranked fairly low because while we want to create a design that can be easily made by many other people, the main objective is to make a solution for the BME teaching lab specifically. Because of this, we don't consider it a high priority to have the design ready for mass production.

Size:

The main factor considered for the size category is how much space the final product is going to occupy within the microscope workspace. This is primarily determined by the physical dimensions of the final product. This receives the fourth highest weight because a compact product is preferred due to limited lab space. Moreover, the product should be relatively small so it does not hinder the operator within the workspace. This criteria evaluates the *Size, Ergonomics, Aesthetics, Appearance, and Finish, and Spatial Configuration* sections of the PDS (Appendix 9.1).

Safety:

Due to the fact that all of our designs require electrical power via the wall outlets of the teaching lab, there is an intrinsic safety concern with each of our potential prototypes. Additional safety concerns will be evaluated on an individual basis, specifically in regards to the risk the design poses to the user during time of operation. The *Safety* section of the PDS is assessed by this metric, and more specific details regarding this subject can be found there (Appendix 9.1).

Justification of Assigned Scores:

Performance:

The linear rails design scored the highest in this category of the design matrix. The rationale behind this decision was the mode of interaction between the device and the stage. The linear rails design directly modulates the position of the stage with the motor, while the remaining designs interact with the manual control knobs. There is a certain undefined amount of movement and travel of this control arm, so it was decided that there would be more potential for inaccuracies in movement driven by interactions with it.

Cost:

The spur gear and worm drive designs scored the highest because all of the parts to fabrication are relatively simple and come from methods such as 3D printing and laser cutting which are rather inexpensive processes. The linear rails design scored lower due to the projected cost of the materials. The materials and fabrication needed to create the rails and attachment pieces are estimated to cost more.

Mechanical Integration:

The Spur Gear design received the highest score due to the simplicity of the design as well as the relatively low interference with the stage and the area under the stage. Spur gears are very simple to work with and will be easy to mount on the cylindrical control knobs of the microscope. The Worm gear design scored slightly less than the Spur Gear design because some issues were foreseen with combining both spur gears and worm gears in the Worm Gear design. The Linear Rail Design scored the lowest because of the possible interference it could have with the stage and other components of the microscope as it bypasses the manual control knobs and moves the stage directly which may cause it to limit the stage’s movement or accuracy.

Ease of Fabrication:

The worm drive and spur gear designs scored highest in the ease of fabrication section because they have less moving parts such as the linear rails and the spur and linear gear interactions. Both the worm drive and spur gear designs have been fabricated by past groups, so we have information on how we can fabricate them and know that they work on a basic level.

Size:

The worm drive and linear designs were awarded a slightly higher score because they often offer a more compact design compared to spur gears. This compactness is particularly valuable in microscopy setups where space is limited. Spur gears can have larger gear diameters, potentially interfering with adjacent equipment or the operator's workspace.

Safety:

The spur gear and worm drive designs scored slightly lower on safety due to the positioning of the device. The device is closer to where the person operating the microscope is residing, which increases the possibility of an injury, such as pinching, to the user of the microscope.

9.3: Material Rationale

The design is primarily made up of a few key materials, including a plastic mounting bracket to hold the stepper motors, Nylon Filament Spur Gears, and plastic parts to hold the manual knob steady and attach the gears to.

The motor bracket will be made out of 3D printed polycarbonate so that it is strong enough to hold the motors steady when they are moving and has enough heat resistance to not soften under the potential heat released by the stepper motors when they are under load. 3D printed plastic is being used for the brackets because CAD models using the dimensions from the microscope will

be able to be fabricated very easily. Polycarbonate is an especially good choice for this design because it has a high tensile strength of about 70 MPa and thermal resistance up to 110 degrees celsius [1]. Both of these are needed as the motors are fairly heavy and produce heat as they work.

The spur gears are going to be made out of 3d printed Nylon filament material. Nylon filament has a higher heat resistance than acrylic gears which is what previous groups decided to make their gears out of. Nylon is also a very strong material that does not require lubrication. Nylon is a material that could be printed in the makerspace and is readily available.

The manual knob supports will also be 3D printed with polycarbonate because of its high tensile strength. These supports will need to stop the manual knob from moving horizontally while letting the knob continue to rotate freely.

Component	**Material Type**	**Quantity**	**Price/Unit**
Stepper motor casing	Polycarbonate	150 Grams	$.12 per Gram $18
Control Knob spur gears	Nylon	100	$15
Screws	#6-32 ¼” UNC Screw	8 Pack	$1.64
Arduino Board	Arduino Board	1	$10(previous group)
Stepper Motor	Nema 17 Stepper motors	2	$28(previous group)
Bread Board	Bread Board	1	$3(previous group)
Stepper motor driver	Stepper Motor Driver Nema TB6600 boards	1	$19.96(Previous group)
			Total: $95.6

[1] “S series PC,” UltiMaker. Accessed: Oct. 13, 2023. [Online]. Available: https://ultimaker.com/materials/s-series-pc/

9.4: Solidworks Files

LINK to folder with all project CAD files.

Conclusions/action items:

TYLER HAUPERT - Oct 13, 2023, 11:26 PM CDT

PRELIMINARY REPORT: MICROSCOPE LOW COST MOTORIZED STAGE

Download

Motorized_Microscope-Preliminary_Report-10_13_2023.pdf (2.74 MB)

12/8/2023 - Final Poster

TYLER HAUPERT - Dec 14, 2023, 4:06 PM CST

Title: Final Poster

Date: 12/8/2023

Content by: All

Present: All

Goals: Create final poster

Content:

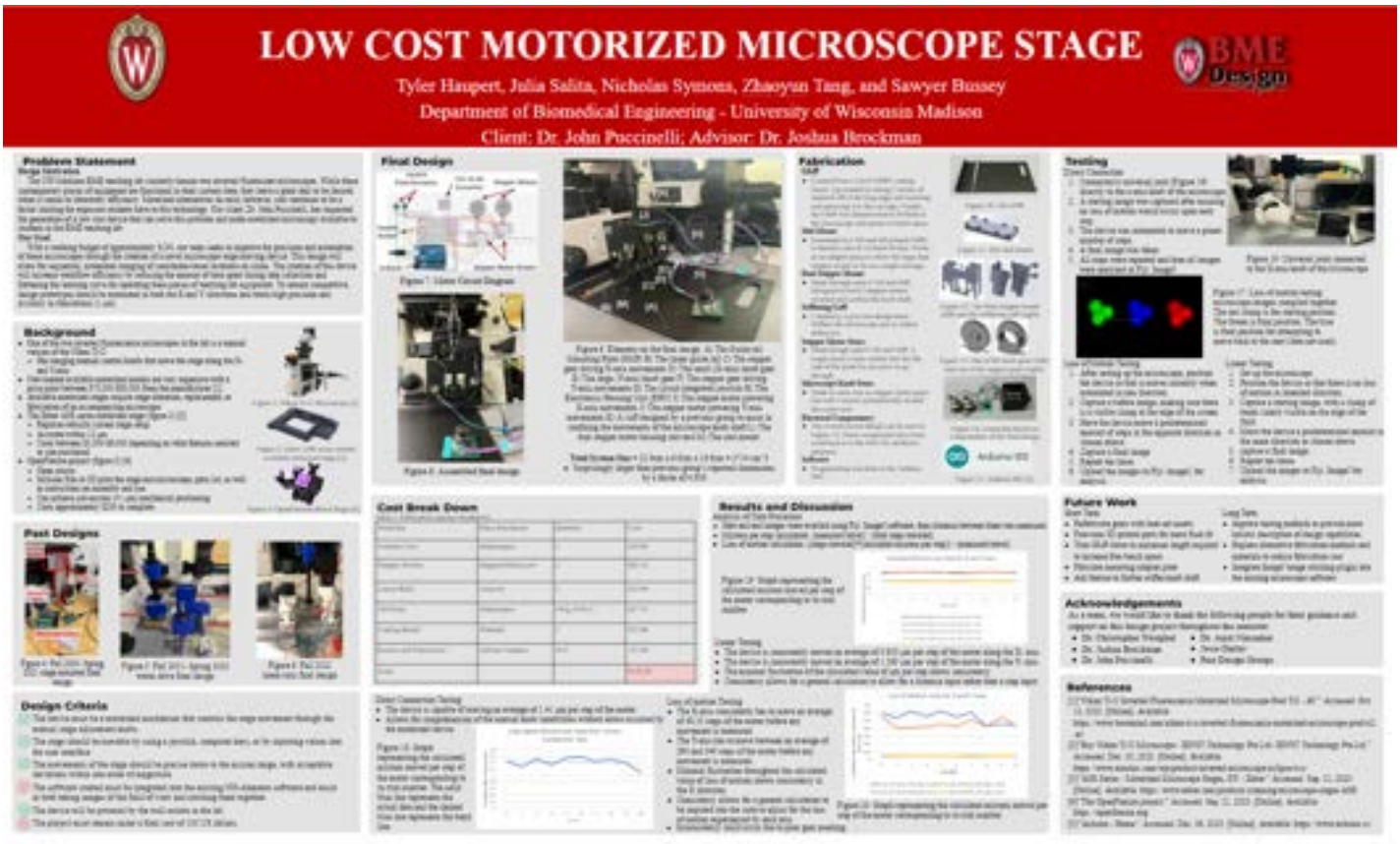

Conclusions/action items:

Final poster is done and presentation went well. Final report now needs drafting and will be the team's primary focus.

12/15/2023 - Final Report

Title: Final Report

Date: 12/14/2023

Content by: All

Present: All

Goals: Complete Final Report and document it here

Content:

Final Report: Microscope Low Cost Motorized Stage

December 13th, 2023

BME 300/200

Clients: Dr. John Puccinelli

Advisor: Dr. Joshua Brockman

Team Members:

Team Leader: Tyler Haupert

Communicator: Nicholas Symons

BWIG: Sawyer Bussey

BPAG: Jerry Zhaoyun

BSAC: Julia Salita

Abstract

Inverted fluorescence microscopes are a highly utilized piece of laboratory equipment used in life sciences research. Manually controlled versions of these microscopes are much cheaper than the market-available motorized alternatives, but are not as ideal for teaching and high-throughput research scenarios. The client, Dr. Puccinelli, tasked the team to create a device capable of adding motorization, automation, and image sequencing capabilities to these microscopes. Through organized brainstorming, structured evaluation ideas, and well-executed fabrication, the team created a working final prototype. Proof-of-concept related findings showed great results; the prototype is capable of moving the stage by user inputs through a circuit-integrated joystick as well as by inputting values into the Arduino IDE. While much better than any previous prototype in every regard except cost, testing still revealed drawbacks in the areas of precision, accuracy and automation, which future groups will look to fine-tune in an attempt to make this product lab-ready. The accomplishments of this semester shed optimistic light on a project that has been torn down and built back up under the reign of each new group attempting to meet client criteria. With a solid base and a functional prototype, future teams will start on more sturdy legs than ever before, and hopefully achieve levels of prototype competency not yet seen in this project's short history.

Table of Contents

Abstract 1

I. Introduction 3

Motivation 3

Existing Devices and Current Methods 3

Problem Statement 5

II. Background 5

Design Research 5

Design History 7

Client Information 9

Design Specifications 9

III. Preliminary Designs 11

Spur Gear Design 11

Worm Drive Design 12

Linear Rails Design 12

IV. Preliminary Design Evaluation 13

Design Matrix 13

Criteria Explanations 14

Design Evaluations 14

V. Fabrication/Development Process 16

Materials 16

Guide Rail Mounting Plate: 16

3D Printed Components: 16

Methods 17

Guide Rail Mounting Plate: 17

3D Printed Components: 18

Final Assembly 20

Testing 21

VI. Results 23

VII. Discussion 27

Implications of Results 27

Ethical Considerations 28

Sources of Error 28

Future Work 29

VIII. Conclusions 31

IX. References 32

X. Appendix 34

Appendix A: Product Design Specifications 34

Appendix B: Materials and Costs 35

Appendix C: Fabrication Protocols 36

3D Printed Components: 36

Appendix D: Computer-Aided Design (CAD) Files 38
Appendix E: Arduino Code 39
Appendix F: Raw Data 40

I. **Introduction**

Motivation

In biological research, microscopes are essential for their pivotal role of helping researchers by magnifying microscopic objects, allowing close examination of details that can't be seen with human eyes alone. Moreover, the integration of motorized stages in microscopes has significantly improved research practices that involve microscopes. These advanced microscopes bring several benefits to researchers, making their work more efficient and precise, especially when studying dynamic biological processes. For example, the automated functionality of motorized microscopes improves the efficiency of data collection. Researchers can program the microscope to automatically capture images at specific locations, freeing up time for more in-depth analysis and interpretation of results. This accelerates the research process and allows scientists to explore larger datasets. However, microscopes equipped with motorized stages typically come at a significantly higher cost compared to their manual counterparts. This poses a significant challenge to accessibility, particularly for budget-constrained and educational laboratories. The motivation behind developing an affordable motorized microscope stage is to broaden access to a more extensive audience by embracing a cost-effective design that eliminates financial barriers. Moreover, the device should be easy to refabricate. This approach aims to enhance the overall experience for both students and staff using the Biomedical Engineering teaching lab. Additionally, the incorporation of image sequencing capabilities into the motorized microscope stage is expected to significantly boost its versatility, making it more robust for applications in both teaching and research.

Existing Devices and Current Methods

While the market currently offers commercial motorized stage replacements for conventional microscopes, these options, usually provided by well-established microscopy manufacturers, often boast advanced capabilities. Unfortunately, their performance comes at a steep price, rendering them financially unfeasible for many laboratories. An illustrative example is the Nikon TI-U, a non-motorized fluorescent microscope in use at the Biomedical Engineering teaching lab, which can be upgraded to a motorized version for a staggering $70,000-$80,000 [1]. The exorbitant cost of these commercial alternatives has prompted the exploration of more affordable solutions.

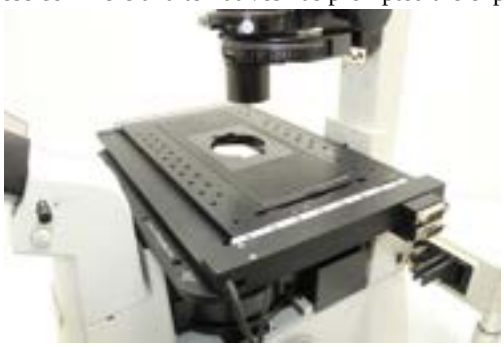

Figure 1: Nikon Ti-U Inverted Fluorescence Motorized Microscope [1].

One such alternative is the Openstage, an open-source project presenting a three-axis drive motorized stage system with a stand-alone controller unit [2]. Despite its considerably lower cost compared to commercial options, the Openstage offers performance that rivals or even surpasses more expensive counterparts. Impressively, its accuracy in the X and Y directions is reported to be 1µm or better. The stage's motion can be controlled either through a handheld controller or a programmed interface, with the added flexibility of easily modifiable controller software. However, the project's total cost hovers around $1000, which, while more economical, might still be a financial challenge for some. Additionally, the design is criticized for being somewhat bulky, as detailed in the PDS (Appendix A).

Another contender in the realm of cost-effective designs is the Openflexture Delta Stage [3]. This innovative stage utilizes 3D printing for its construction, and its electronic components are housed in the base, powered by a Raspberry Pi. Operating in the X, Y, and Z axes with three stepper motors, this compact design is suitable for placement on a laboratory bench or within a microbiological safety cabinet. Notably,

the Openflexture Delta Stage comes at a more palatable price point of around $336, making it a more accessible option when compared to both commercial and the Openstage alternatives.

Figure 2: Openflexture Delta Stage [3].

Problem Statement

The UW-Madison BME teaching lab currently houses two inverted fluorescent microscopes. While these contemporary pieces of equipment are functional in their current state, they leave a great deal to be desired when it comes to laboratory efficiency. Motorized alternatives do exist, however, cost continues to be a factor limiting the exposure students have to this technology. With a working budget of approximately $100, our team seeks to optimize the precision and automation of these microscopes through the creation of a novel microscope stage moving device. This design will allow for sequential, automated imaging of coordinate-based locations on slides. The creation of this device will increase the consistency of measurements, reduce the amount of time spent during data collection, and lower the learning curve for operating this equipment. To remain competitive, design prototypes should be automated in both the X and Y directions and retain high precision and accuracy in translations (1 μm resolution).

II. **Background**

Design Research

The BME Teaching Lab at UW-Madison houses, amongst many other pieces of equipment, two inverted fluorescence microscopes- one of which can be seen in Figure 3. The “inverted” in the name is due to the flipped arrangement of certain parts of the microscope relative to what is normally seen. These microscopes house an objective lens below the stage, with a condenser and light source located above the stage [4]. In addition to an altered arrangement of componentry, inverted fluorescence microscopes also have a unique imaging mechanism that utilizes fluorescent dyes. Dyes are placed within the sample by researchers and excited through the use of a halogen lamp as well as LEDs and lasers. Differences between input and output emission are used to generate high resolution imagery of things like living cells and tissue culture [5].

Figure 3: Nikon TI-U inverted fluorescence microscope used in the BME Teaching Lab [6]

This variety of microscope has become very popular in the scientific community, specifically amongst researchers as well as in general laboratory use across a variety of categories of science. This points to the significance of creating a device that can modify microscopes without previously integrated mechanized systems at a low cost; many in the scientific community would benefit from the reduced costs of equipment that such a device would provide.

As research was conducted regarding the efficiency and accuracy of the device, it was discovered that gear meshing and the reduction of deflection should be a very high priority goal during the production of the device. Gear meshing can be described as the interaction between the teeth of two gears, as one tooth from one gear is inserted in between two teeth of another gear, they become meshed. Solid and consistent meshing is what makes an accurate and reliable gear system, and this consistency is why gears have been chosen to create a relationship between the motors and control knobs despite alternative solutions such as belts being available. However, consistent gear meshing can be difficult to accomplish, especially amongst gear systems with more than 2 gears. As research was conducted to determine the best gear setup for the design, there were two major factors that influenced the final decision, size and gear functionality. This can be seen in more detail in the PDS (Appendix A). It was already established from our Client's design criteria that the device as a whole should not take up excessive space on the countertop where the microscope is located. Research was also conducted to determine common pitfalls that occur when working with gears, which were determined to be gear meshing, gear lockup, and gear deflection. Originally, this year's team met with a Mechanical Engineering professor, Doctor Christopher Westphal, to discuss gearing as well as the designs that were being developed at that time in regards to the gear setup. Initially, a three year design was going to be used as it was thought it would reduce the size of the overall design by having smaller gears. However, Doctor Westphal highlighted that a three gear design, especially with 3D printed gears, was prone to gear lockup. Gear lockup would greatly reduce the accuracy and efficiency of the device, so a two gear system was used instead. As previously mentioned, the ability of the gears to mesh is also crucial for an efficient and effective gear system that prevents backlash and loss of motion. Figure *4* below is a diagram that shows an example of effective gear meshing with minimal backlash. Backlash can be described as the effect that unfilled space between two meshing gears has on the loss of motion in a gear system[7]. This contributes to a loss of motion in the overall device. The effects of the loss of motion are highlighted in the testing results in *Section VI.*

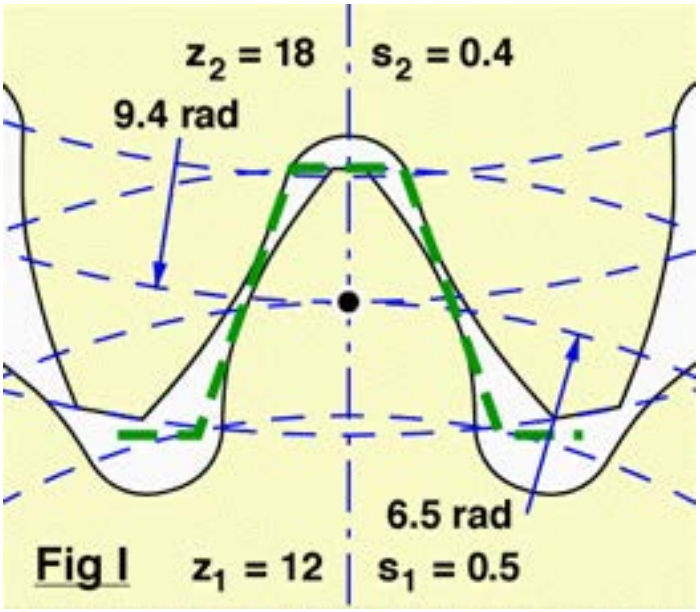

Figure 4: showcase of gear meshing and backlash [8]

Design History

The Low Cost Motorized Microscope stage design has had several iterations prior to our assignment to this project. Each of these designs has made steps towards creating a consistently functional final project, but none have done so to completion. Previous groups have taken several different approaches to solving the issue of integration motorization into the design of the microscope. Each of the previous designs, as well as this year's final Prototype have used the already existing manual control knobs as the medium for manipulation of the stage. Each team has also been faced with producing a solution to one of the more difficult aspects of this project to overcome, that being the Y-axis travel of the stage. As the stage is moved by the manual control knobs in the X-axis direction, the manual control knob shaft that hangs from the stage is not moved, however, when the stage is moved in the Y-axis direction, the manual control knob moves with the stage. Since the desired outcome of this project is to create a device that manipulates the stage in both the X and Y directions, the movement of the manual

control knobs increases the complexity of reaching our goal. Due to the movement of the control surfaces (the manual control knobs), a solution must be created in order to keep the device's movement relative to the control knobs.

Workarounds that have been developed by previous groups include a linear rail system to allow the device to slide along the side of the microscope as the stage moves in the Y direction, as well as a housing unit that hangs from the underside of the stage that acts to support each component of the device. Previous groups have encountered issues with both of these methods. Both are shown below in Figure 5 and Figure 6.

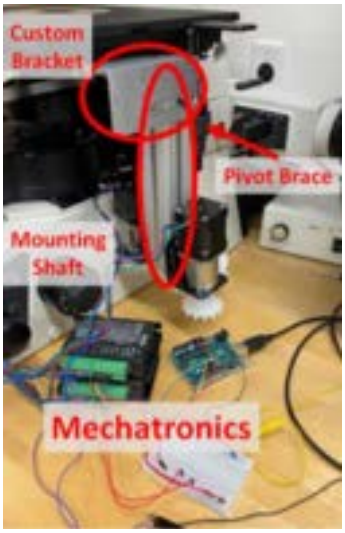

Figure 5: Fall 2020- Spring 2021 stage-mounted final design

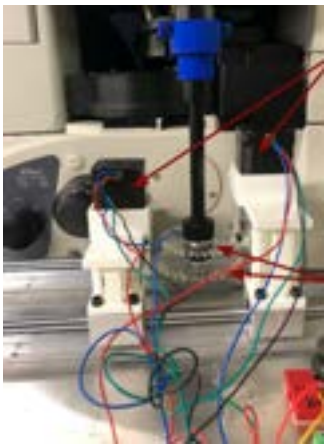

Figure 6: Fall 2022 linear rails final design

The Linear Rail System has been shown to produce inaccuracies due to the movement of the gearing as well as motor components of the device. Previous groups have utilized a faulty rail system that allows rotation around the centroidal axis of the rail, this allowed for deflection of gears as well as overall instability of the device. The hanging housing unit has proved to be very heavy, which can play a role in creating inaccuracies of the microscope's ability to focus as a heavy object on one side of the stage can cause it to tilt, which can cause the microscope to render blurry images.

Client Information

The client, Dr. John Puccinelli, is the Associate Chair of the Undergraduate Program and Associate Teaching Professor for University of Wisconsin-Madison Department of Biomedical Engineering. He oversees the BME Teaching Lab in ECB 1002 and is responsible for the purchasing and management of all equipment inside. Dr. Puccinelli has tasked our team with the creation of a device to motorize and automate the inverted fluorescence microscopes in the teaching lab to offer a more robust teaching and research experience to biomedical engineering students and staff at UW-Madison.

Design Specifications

Through collaboration between the client and our team, a Product Design Specifications (Appendix A) document was created. This document can be found in its entirety in *Section A* of the Appendix, but will also be described here. Our client requested that this device motorize the stage of the microscopes with a maximum fabrication budget of $100. This device must be easily attachable and detachable so it can be used as an accessory, rather than being permanently integrated into the microscope's design. Final prototypes of this semester should be capable of moving the stage of the microscope as directed and be accurate to within a micron (1 μm) of the intended movement input by the user. Inputs from the user should either be directed by a joystick integrated into the circuit or by inputting coordinate-based locations into a user interface (UI) the team would create. The client would be satisfied with inputting these values into the arduino IDE for proof of concept and testing, but would like a more streamlined UI in a final design. This design, at Dr. Puccinelli's request, will interact with the preexisting manual control knob of the microscope. This knob is located very close to many other mechanical structures of the microscope such as other adjustment knobs on the side of the microscope. With this in mind, designs should be compact and modeled in a way such that they won't interfere with functions of the microscope when attached.

III. **Preliminary Designs**

This Year's Team brainstormed several designs to try and overcome the issue of the stage's Y direction travel. Previous years' designs as well as the clients design criteria were considered in order to create the following designs. These decisions were supplemented by additional research in order to gather more information to produce better refined preliminary designs.

Spur Gear Design

Figure 7: Spur Gear Design

The spur gear design is attached directly under the stage and interacts with the existing control knob. In this design each motor is directly connected to a spur gear. When it rotates, its horizontal alignment and connection with a spur gear would move the control knob to turn, thereby moving the stage in the X and Y direction. The main advantage of this design is that it reduces the size of the device and the space it occupies on the countertop.

Worm Drive Design

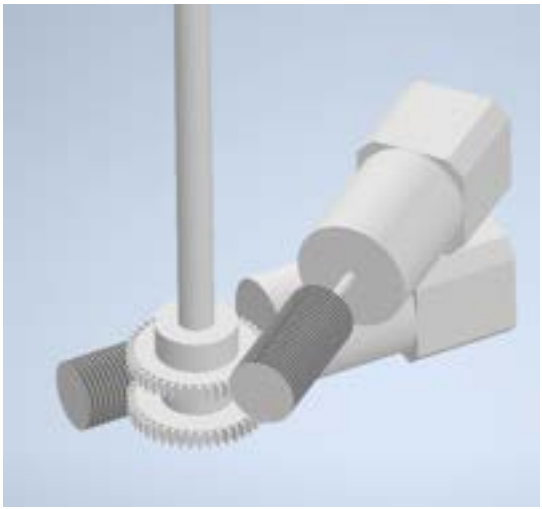

Figure 8: Worm Drive Design

The worm drive design interfaces with the existing manual control knob in order to move the stage. In this design, the manual knob will have spur gears added so that the worm gears can turn the knob. The worm gears will be placed on top of one another to reduce the amount of space used and will be angled so they can easily mesh with their respective spur gear.

Linear Rails Design

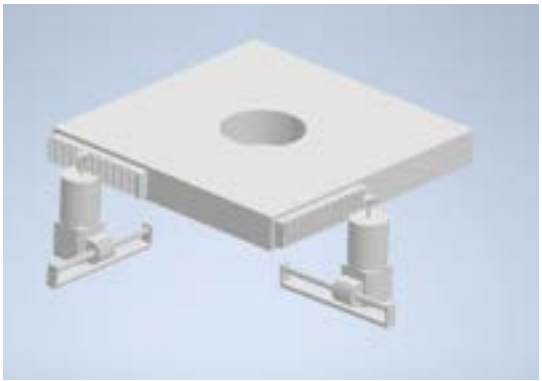

Figure 9: Linear Rail Design

The last design has many major differences to the previous designs. The linear rail design uses stepper motors to directly move the stage. It accomplishes this by having a spur gear on each stepper motor and linear gears attached to the stage. The spur gears can then move the stage

by moving the linear gears. In order to keep the spur gear in contact with its linear gear when the stage is moving, there are linear rails attached to each stepper motor. These linear rails let the motor freely move with the stage.

IV. **Preliminary Design Evaluation**

Design Matrix

Table 1: A design matrix comparing the three designs.

Design Categories (Weight)	**Design 1: Spur Gears**		**Design 2: Worm Drive**		**Design 3: Linear Rails**	
Projected Performance (25)	4/5	20	3/5	15	5/5	25
Compatibility (20)	5/5	20	3/5	12	3/5	12
Cost (20)	4/5	16	4/5	16	3/5	12
Ease of Fabrication (15)	4/5	12	4/5	12	3/5	9
Longevity (10)	4/5	8	4/5	8	5/5	10
Safety (5)	4/5	4	4/5	4	5/5	5
Total Points:	80		67		73	

Criteria Explanations

The following criteria were created by the team to evaluate each of the designs in a holistic manner based on requirements detailed in the Product Design Specifications (Appendix A).

The projected Performance of the motorized microscope stage is evaluated on the design's capability to adjust the stage in the x and y axis consistently, precisely, and efficiently. This category is scored the highest in the design matrix due to the high sensitivity and accuracy of the client requests. Specific considerations for this evaluation are outlined in the *Performance Requirements* section of the PDS.

Compatibility assesses how effectively the device interacts with the microscope's structural and mechanical elements, considering factors such as the microscope's limited surface area and where the device is mounted. As stated in the PDS's *Size, Weight, Ergonomics, and Spatial Configuration* sections, the device should be light, and compact and not interfere with existing mechanical structures of the microscope.

Cost is evaluated on the total price of the materials and associated fabrication costs, such as machinery use fees. Cost is ranked higher in the design matrix due to the client's emphasis on remaining under budget and allowing the project to be accessible for those of all economic backgrounds. The total expenses should aim to remain under $100, as outlined in the *Cost* section of the PDS.

The Ease of Fabrication category evaluates how easily the device will be able to be fabricated, along with how easy it is for other people to replicate the design in the future. The considered factors are outlined in the *quantity* section of the PDS. This category is less important because although this creates a design that can be easily reproduced by others, the main objective is to make a solution for the BME teaching lab specifically. Therefore, while still being considered, it is not ranked as highly as other metrics in the design matrix.

Longevity refers to the durability and lifespan of the components and overall device. It encompasses the ability of the device to withstand continuous usage over an extended period without significant deterioration in performance. A design scoring high longevity ensures that the materials, motors, and other essential elements are robust enough to endure repeated movements and usage, thereby extending the functional lifespan of the device. This consideration is not as important but essential for creating a reliable solution.

Finally, as all our design concepts utilize electrical power sourced from the teaching lab's wall outlets, inherent safety concerns are associated with each potential prototype. Therefore, the safety category focuses on the potential risks posed to users during the operation of the device, as detailed in the *Safety* section of the PDS.

Design Evaluations

Regarding projected performance, the Linear Rail design stands out as the top performer among the three preliminary designs considered. This is because the Linear Rail design is directly connected to the stage. When interacting directly with the stage, it makes the device more accurate and precise, leaving less room for mistakes. On the other hand, both the Spur Gear and Worm Drive designs move the stage by interacting with the existing control knob. However, this indirect method means they may need a lot of calibration and testing to match the accuracy of the Linear Rail design. So, the straightforward connection between the Linear Rail design and the stage makes it perform better, providing more precise performance compared to the other designs.

The Spur Gear design has achieved the highest rating in the compatibility category due to the simplicity of its design and its relatively low interference with both the stage and the space beneath it. Spur gears are straightforward to work with and can be easily mounted on the cylindrical control knobs of the microscope. The Worm Drive design received a lower score because of the challenges associated with combining spur gears and worm gears. In contrast, the Linear Rail design scored the lowest due to potential compatibility issues with the stage and other microscope components. This is because the Linear Rail design bypasses the manual control knobs, moving the stage directly and potentially restricting its range of motion. While the Spur Gear design excels in compatibility, the Worm Drive design faces complexities, and the Linear Rail design raises concerns about potential interference.

For the cost category, both the Spur Gear and Worm Drive designs have received the highest score. Compared to the Linear Rail design, these two designs are much simpler and require fewer materials to fabricate. Furthermore, all the parts to fabricate are relatively simple and come from methods such as 3D printing and laser cutting, which are relatively inexpensive. The Linear Rail design has a lower score, primarily due to the higher expenses associated with its fabrication and materials. Due to the complex nature of the Linear Rail design, some components will need to be purchased instead of fabricated, which significantly raises the cost.

Considering the simplicity of the two designs, the Spur Gear and Worm Drive both score the highest in the ease of fabrication category. These two designs have fewer moving parts compared to the Linear Rail design, which is one of the reasons they scored higher in this category. Fewer steps are needed to fabricate the device for these two designs. Moreover, both the Worm Drive and Spur Gear designs have been fabricated by previous groups. This means that information on how to fabricate them can be gained by looking through previous groups' works and notebooks. Furthermore, it is certain that the Spur Gear and Worm Drive designs can be successfully fabricated because of the work done by previous groups. The Linear Rail design is entirely new, and it is uncertain what fabrication methods are needed in order to complete a physical product. There are no notes or experiences from previous groups that can be used as reference, making it a lot harder to fabricate compared to the Spur Gear and Worm Drive design.

The Linear Rail design is the top choice for longevity in the design matrix of the low-cost motorized microscope stage because it directly connects to the stage, reducing wear and tear on components. This direct link enhances the system's durability and lifespan by minimizing the chances of things breaking or wearing out over time, making it a durable and reliable solution for prolonged use. The Linear Rail design is a more robust and long-lasting option, ensuring the motorized microscope stage's overall reliability. On the other hand, the Spur Gear and Worm Gear designs rely on indirect methods, interacting with the existing control knobs. This indirect approach introduces more points where things could wear down and require careful tuning to stay accurate, impacting their longevity. While the Spur Gear design is simple, it may face challenges in the long run due to its reliance on gears. The Worm Gear design, with its combination of spur gears and worm gears, is more complex, raising concerns about its ability to endure continuous use. The intricate nature of this design, along with potential wear in the gear assemblies, makes us question its long-term durability.

For safety considerations, the Linear Rail design was the most secure option. All three designs are reasonably safe, but safety does have to be considered because the device is powered by the lab’s wall outlets. The Spur Gear and Worm Drive designs scored slightly lower on safety due to the positioning of the device. These two devices are attached to the manual control knob, where the person will have to come in close contact to operate the microscope. This orientation of these two designs increases the possibility of an injury, such as pinching, to the operator of the microscope.

V. **Fabrication/Development Process**

Materials

Overview: All materials necessary for the fabrication of this device have been documented and input into the BPAG Expense Table (Appendix B). For more information on part numbers, manufacturers, costs, and more, please refer to the materials and cost table (Appendix B).

Guide Rail Mounting Plate:

- 12” x 16” Cutting Board
    - Midnight Granite finish
- Epoxy
- Velcro
- Wood Screws

3D Printed Components:

- Black PLA
- Socket cap screws
- Heat-set inserts
- Set screws

Methods

Guide Rail Mounting Plate:

Figure 10: The GMP following the completion of fabrication.

The GMP is fabricated primarily from the aforementioned 12” x 16” cutting board. To begin, 2 inches will be cut off of the long edge of the board. This will leave a 12” x 2” piece and a 12” x 14” piece. After each cut in this process the edges will have to be cleaned up with a deburring tool and either a heat gun or blow torch to ensure mounting steps later in this process achieve a flush fit. After the cut has been cleaned up, the next step is to mount the smaller piece to the cut end of the board to create a lip that sits 2 inches off the ground. First, arrange the pieces as they will be mounted, and pre-drill and countersink holes for the wood screws to mount into. The drill bit used for pre-drilling should be smaller than the thread size of the wood screw that will be mounting the lip to the board. Prior to mounting the lip, mix and apply epoxy to all surfaces that will be mating. After this is all accomplished, the wood screws can be driven in. The extra epoxy can be cleaned up with a razor blade or by simply wiping it off with a glove on. This preliminary GMP now needs to be set for a day to allow the epoxy to cure. The GMP now needs to be correctly dimensioned to fit flush up to the microscope for mounting. Using TEAM Lab band and table saws, 0.5 inches must be taken off the top of the 2 inch lip, and the overall width of the plate must be reduced to 9 inches. Velcro is then applied to the mounting surface of the lip, which allows the GMP to secure itself to the microscope and resist movements during use. The final fabrication step involves the mounting of the linear rail to the plate. After using a marking pen to line up the microscope knob with the GMP, two wood screws are used to mount the linear rail directly under the path the knobs travel.

3D Printed Components:

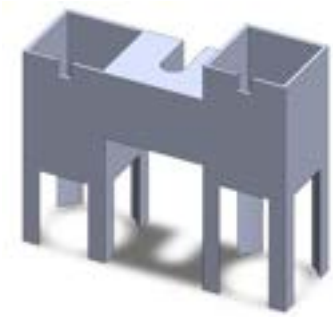

Figure 11: The dual stepper mount.

Figure 12: One of the knob gears (left) and one of the stepper gears (right).

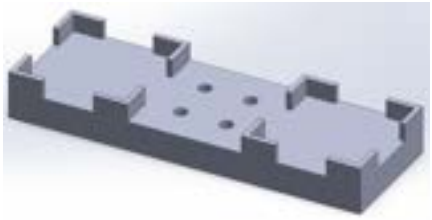

Figure 13: The sled mount.

Figure 14: The stiffening cuff.

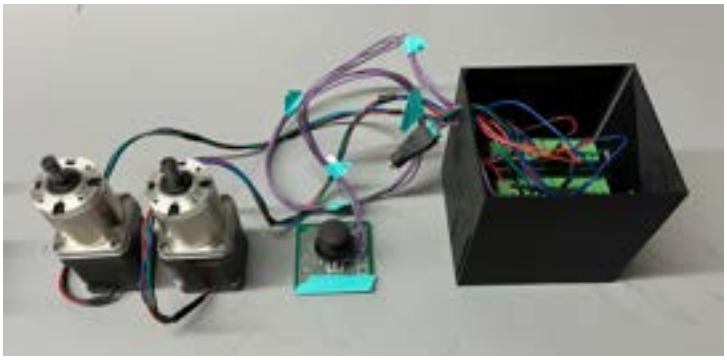

Figure 15: The Electronics Housing Unit and accompanying hardware.

The final, assembled design incorporates the GMP, as well as eight separate 3D printed parts. These parts are: the dual stepper mount (Figure 11), the two stepper gears (Figure 12, left), the two knob gears (Figure 12, right), the sled mount (Figure 13), the stiffening cuff (Figure 14), and the Electronics Housing Unit (Figure 15). With the exception of the stiffening cuff, which was made by a previous team, all of these parts were conceived of, designed, and fabricated by our team. Every part incorporated in the final design was printed on the Bambu Labs X-1

Carbon 3D printers in the UW-Madison MakerSpace using black PLA with 20% infill and supports on. Some parts required additional post-print modifications. CAD files and more detailed fabrication steps regarding each of these parts can be found under Fabrication Protocols and Computer Aided Design (CAD) Files (Appendix C, D).

Final Assembly

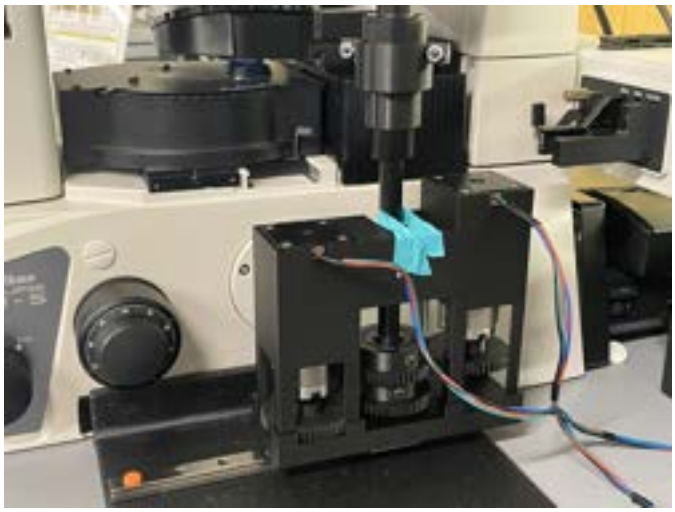

Figure 16: The final design of the Fall 2023 Low Cost Motorized Microscope Stage Project

The culmination of this semester's efforts led to the development of the final prototype (Figure 16). Similar to previous designs (*Design History*), this design manipulates the preexisting manual control knobs that are used to drive stage movements. This prototype utilizes a single linear rail to maintain a stable, consistent connection between the stepper gears and the control knob gears by ensuring that the device's motion is directly correlated with the movement of the control knob shaft. The linear rail system is mounted on the GMP (Guide Rail Mounting Plate), which supports a ball bearing carriage that rides on the rail. This carriage did not meet the mounting requirements of the entirety of the device as there was simply not enough room to mount all of the equipment onto the carriage that was only approximately 50mm long. To overcome this issue, an additional mounting plate that is referred to as the "sled mount" was created with a purpose of increasing the mountable surface area. The sled mount was mounted onto the top of the original carriage of the linear rail system. This allowed for larger 3D models to be created without needing to worry about mounting it to the smaller carriage. The sled mount acted as a support for the stepper motor housing unit that is referred to as the dual stepper mount. This dual mount housed each of the stepper motors in an inverted orientation, meaning that the drive shafts of the stepper motors would be pointed towards the GMP. They were positioned in this way to allow the stepper gears to be spatially arranged in a way such that they are capable of meshing with the gears fixed to the microscope knobs. The dual mount also acted to stabilize the manual control knob shaft in order to reduce inaccuracies imposed by unwanted deflections of the knob shaft.

This device is currently usable through two different modes of user input. The first of these two options revolves around the joystick that has been soldered into the electrical circuit. After uploading the correct code (Appendix E) from the Arduino IDE to the Arduino board, the user can drive the stage by simply moving the knob in the direction they would like the stage to go. While the mechanisms enabling this movement still need some fine tuning, this panning feature is fully functional in nature. Coordinate or Step count based movements, the other mode of interaction with this device, are not quite as functional. The current design is fully capable of moving the stage a set number of steps, however, improvements in the driving mechanisms of this design will need to be made before this changes to a system where the user is able to input coordinates and have the stage center that point under the field of view. Loss of motion and shaft deflection related inaccuracies continue to be the center of motivation for future work, and the following testing protocols were created in order to assess where, specifically, improvements need to be made.

Testing

The testing phase of this project aimed to assess the performance and capabilities of the automated microscope positioning system. The primary components used for testing included a slide with fluorescent beads viewed using the Nikon Ti-U inverted fluorescence microscope, a universal joint connector, and the motorized positioning device. For direct connection testing, the universal connector was securely fastened to the X-axis manual control knob and the stepper motor, as seen below in Figure 17. For linear motion and loss of motion testing, the motorized device was secured to the microscope with the dual stepper motor mount placed on the carriage and lined up with the gears, as seen above in Figure 16.

Figure 17: Direct connection testing set up. The universal joint connector is securely fastened to the x-axis manual control knob and the selected stepper motor.

The team performed three distinct tests: Direct connection, loss of motion, and linear motion. The direct connection test was aimed at recording and quantifying the capabilities of the motors and the manual knobs. This test sought to determine the optimal gear ratio for the motorized positioning device to achieve the movement specifications outlined in the *Physical and Operational Characteristics: Accuracy and Reliability* section of the PDS (Appendix A). The loss of motion test was necessary to ascertain the quantity of movement lost when the device changes direction. Establishing a consistent loss of motion buffer will aid in a future calculation to convert an inputted distance to an associated number of required motor steps. Finally, linear motion testing aims to measure a consistent stage displacement per motor step while mitigating loss of motion error. The results of linear motion testing will also contribute to establishing a calculation to convert inputted stage displacement into the required amount of motor steps.

For each test, a fluorescent bead slide was placed on the stage, ensuring the slipcover face was positioned downward on the stage. The microscope was turned on and set to the predetermined settings for the distinct test. For all testing, the motors moved the device along one axis and direction until no loss of motion was ensured, and a starting image was captured. During direct connection and linear motion testing, the motors were automated to move between 150-400 steps along the same axis and direction. However, for loss of motion testing, the motor was automated to move between 400-600 steps along the same axis but in the opposite direction. A final image was captured, and this process was repeated until ten data points were collected. The linear motion and loss of motion procedures were repeated along the same axis but with a different number of steps and along the other axis with two different amounts of steps. For full written out steps refer to Testing Protocols (Appendix F).

The images were saved and sorted into different folders on a thumb drive. The photos were then uploaded to folders on personal devices. The images were then put through Fiji: ImageJ to overlay the initial and final photos for data collection. The data was then stored and combined into a large spreadsheet (Appendix G).

A possible source of error while testing could stem from the gears not meshing properly. The gear attached to the Y-axis stepper motor did not always have a tight fit against the gear attached to the associated manual control knob. The poor gear meshing may result in issues with gear catching or consistent and accurate movement. Additionally, the error may be due to the lack of a locking mechanism to hold the control knob shaft to the positioning device, which allowed for the knob to slide and move. To mitigate sliding, the team placed tape with a folded-over center around the shaft to hold the manual knobs in proper placement with minimal rotational friction, as pictured above in Figure 16.

VI. **Results**

The images that were collected in the testing phase were analyzed using Fiji ImageJ [9] software. The start and end images from a given trial were inputted into the Fiji software and overlaid with the start image being red and the end image being green, as seen in Figure 18. The Fiji software was then used to measure the distance between the two images by drawing a line between a distinguishable point on both the start and end images. The software was used to calculate the number of pixels between the two chosen points and convert that number to a measurement in microns based on the microns per pixel scalar value included in the image files. The measurements were then compiled into an Excel spreadsheet for further analysis. The full spreadsheet of measurements, along with all of the images taken during testing and the ImageJ overlays, can be found under Raw Data (Appendix G).

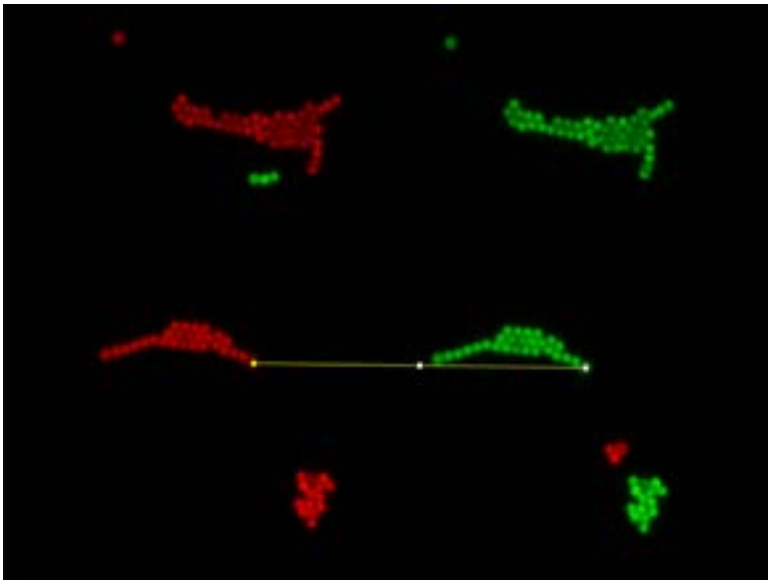

Figure 18: The start (red) and end (green) images from trial 8 of the 200 step X linear testing experiment. The yellow line is part of the Fiji ImageJ software and was used to measure the distance (in microns) between the start and end images.

The first calculation that needed to be made was the calculated microns per step (MPS), which is simply the distance (in microns) that the microscope stage moves for each step of the motor. This is an important value to calculate because it quantifies the smallest possible movement that can be made and is needed in other calculations as well. The testing procedure for the linear testing can be found in the testing section of *section V*. To find the MPS, the measured travel distance was divided by the number of steps that the motor had been told to move, as seen in Equation 1. In Equation 1, MPS is calculated microns per step, MT is measured travel of the stage (in microns), and S is the number of steps moved by the motor.

$$MPS = MTS \quad (1)$$

The MPS calculation was used on the data from both the direct connection testing and linear testing. The final goal was to get a calculated average value of 1 MPS, which would mean that the stage could be consistently moved in single micron increments, which was our original goal outlined in the *Accuracy and Reliability* section of the PDS (Appendix A**)**. Graphs of the data for the direct connection and linear testing results can be found below in Figure 19 and Figure 20, respectively. The average MPS that was calculated for the direct connection was 1.41, which was very close to the original goal of 1 MPS. For the linear testing of the X and Y axes, the calculated MPS was .95 and 1.59, respectively. The standard deviations for the direct connection test, X axis linear test, and Y axis linear test were 0.146, 0.015, and 0.042, respectively, showing that the X axis was the most consistent.

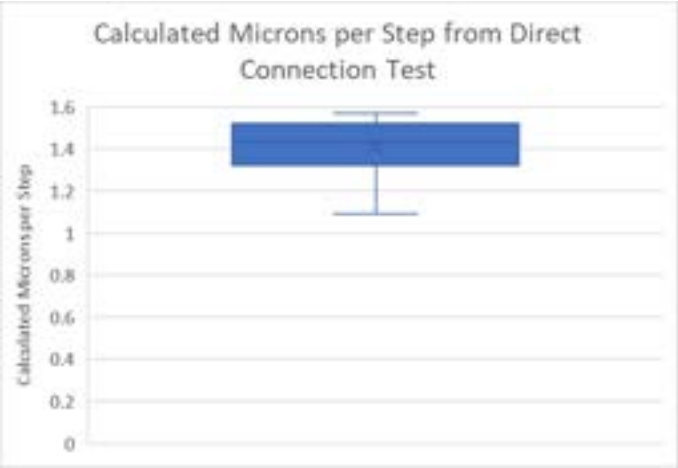

Figure 19: Box and whiskers plot representing the calculated microns moved per step of the motor, where the motor was moved in 500 step increments.

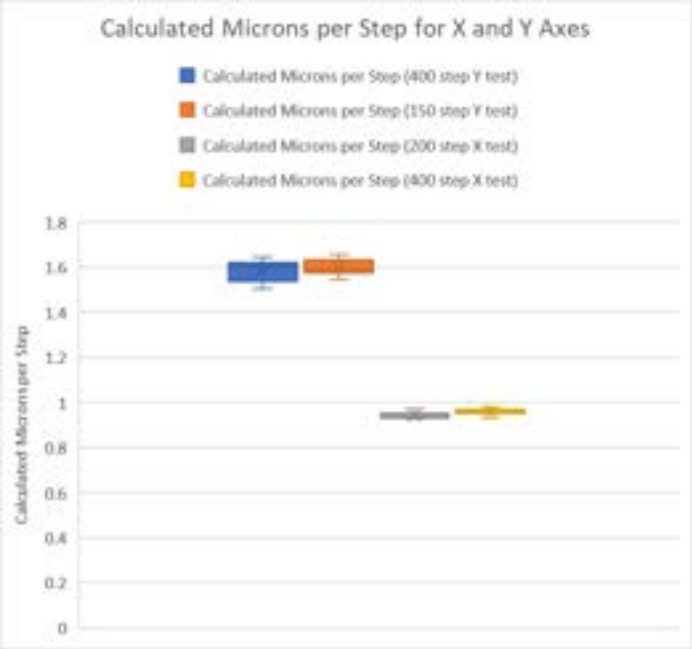

Figure 20: Box and whiskers plot representing the calculated microns moved per step of the motor using multiple different increments of steps.

Another important data set that was analyzed was the loss of motion when the direction of travel was changed. As mentioned in the design research section of *section II*, having space between the teeth of the gears causes backlash, which then causes the stage to not move when the motors first start turning. This becomes a serious problem when a user is trying to input specific values of travel into the arduino, but the stage doesn't move as far as it is meant to. If the value of this loss of motion were consistent, however, the extra amount of motor movement needed to overcome the loss of motion during a direction change could be added directly into the Arduino code. To find the calculated loss of motion, the number of steps moved by the motor is multiplied by the calculated MPS for the respective axis, which gives the theoretical travel of the stage. The measured travel of the stage is then subtracted from the theoretical travel to get the travel distance that was lost (in microns). This process can be seen in Equation 2, where LoM is the calculated loss of motion, S is the number of steps traveled by the motor, MPS is the calculated microns per step for the respective axis that is being tested, and MT is the measured travel of the stage. The measurements for the loss of motion testing were found in the same way as the measurements for the previous tests.

$$LoM = (S*MPS)-MT \qquad (2)$$

The final results that were found for the loss of motion testing can be found below in Figure 21. The data is displayed as the number of microns that were lost compared to the theoretical travel. When translated to the number of steps that the motors would have to move to compensate for this loss, the X motor would have to move an extra 48.5 steps on average (with a standard deviation of 3.48 steps) and the Y motor would have to move between 290 and 340 steps on average (with standard deviations of 54.3 and 75.3 depending on the number of steps used in the test). The large discrepancy between the X and Y axes here will be discussed in the sources of error section of *section VII*.

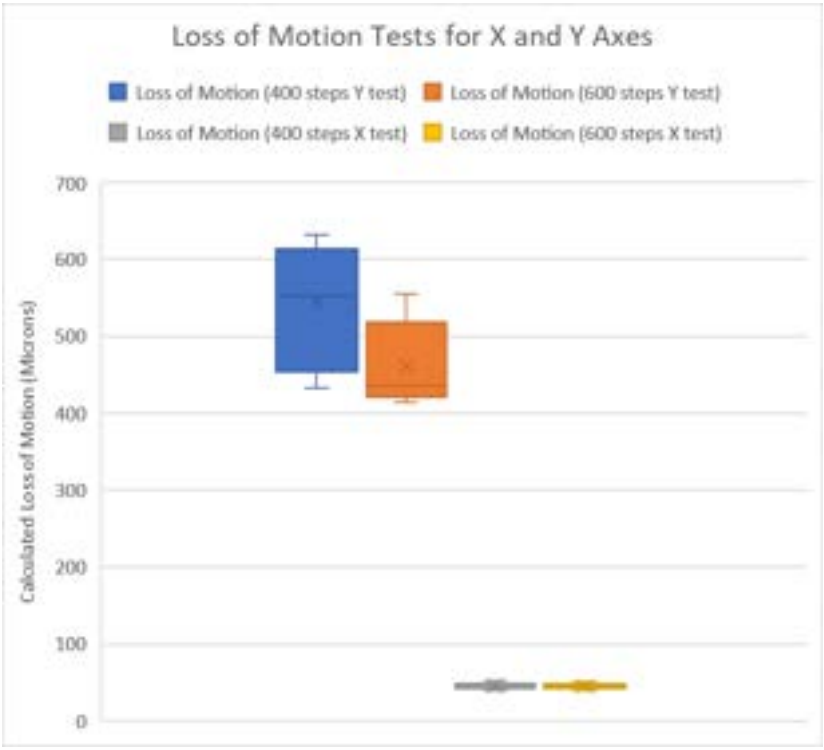

Figure 21: Box and whiskers plot representing the calculated loss of motion (in microns) for the X and Y axes using 400 and 600 step increments for each.

VII. **Discussion**

Implications of Results

After all of the testing and calculations performed by the team, several conclusions were able to be made. The first, which greatly affected the final fabrication process, was that near-micron resolution was possible by using the direct connection device. This proved that a 1:1 gear ratio would be able to be used in the final design between each of the motors and the manual control knobs. When looking at the linear testing of the final design, It is clear that the X axis was able to very consistently meet the team's goal of 1 MPS, and while the Y axis was slightly further away from this, it was still more consistent than the direct connection device. Consistency, in this case, is more important than having a precise value of 1 MPS. This is because the measured MPS value can be factored into the Arduino movement code so that the user can input a travel distance in microns (instead of the number of steps), and the motors will accurately and reliably move that distance.

A similar conclusion was also able to be made from the loss of motion calculation. For the loss of motion experiment, the X movement was again very consistent, while the Y movement had a lot more variation. The loss of motion value can again be factored into the Arduino movement code as long as it is consistent. This would have to be implemented in a way that the motors would only move the extra distance when they are switching directions, because when they are going in one continuous direction, there isn't any loss of motion. The Y axis results are most likely too spread out to implement this software solution at this point, but after some more fine-tuning of the dimensions, the Y gears should mesh better and have a more consistent loss of motion calculation that can be implemented into the Arduino code.

Ethical Considerations

When developing a device that functions in a regulated environment, ethical considerations must be addressed to ensure the safety and inclusion of all. Ethics surrounding research while designing a new device with possible hazards must take sufficient information and understanding, well-being, and safety into consideration. The research should consist of excellent quantity and quality to provide a complete understanding of appropriate design parameters to aid in choosing the correct design path. Additionally, honesty and providing proper credit is a substantial focus of research ethics.

Finally, inclusivity is a noteworthy ethical consideration during the design process because it allows the device to be available to all people of different backgrounds. Thus, the motorized positioning device considered economics, usability, and adaptability throughout prototype development. The chosen design allows for restricted and lower-budget projects to gain access to the necessary technology. The devices' usability makes for an easy transition between motorized and manual microscope use. Easy usability also allows for a simple learning curve of how to operate the device, which can help learners understand the functions of the microscope faster. Finally, the adaptability of the motorized device allows for control placement adjustment to aid in accommodating those with lower or limited mobility to participate in using the microscope.

Sources of Error

Several sources of error must be scrutinized to identify and potentially resolve inconsistencies, limitations, and inaccuracies. Fabrication tolerances, such as those acquired during 3D printing, must be considered. Tolerances are especially prominent in accuracy-dependent areas of design, such as the gears, because the error may compound. Incorporating tolerances of fabrication methods into the design allows for error mitigation in aspects of the device, such as gear meshing.

A second source of error is poor gear meshing. Occasionally, the device would function inconsistently with previous movements. While improvement may always be achieved, gear meshing with the X-axis gears was smooth with little inconsistencies. However, the Y-axis gears had trouble interlocking as the gears were not as close together as they should have been. Poor gear engagement caused significant inconsistencies when measuring the movement per motor step and loss of motion.

Additionally, a third source of error, which results in testing variability, could stem from leeway in the motor and control knob. During testing, there were some issues with the control knob deflecting away from the gears. While the accuracy of the motors and control knobs is of substantial quality, no design is ever one hundred percent perfect. Considering errors in the pre-built aspects of the design allows for realistic expectations that aid in improving the design to reduce the resulting errors.

Finally, while it is not a source of error, it is essential to consider flaws in small-scale positioning. Small-scale positioning may have more error in accuracy compared to large-scale movement positioning. This error can be from many aspects, such as loss of motion, gear meshing, and tolerances. Due to the stages' small scale of movement, inconsistencies are highly showcased, while grander movements allow for less error. For example, with loss of motion, should the motors move an average buffer, the loss of motion will not be exact every time. Small distances may cause no movement or a relatively sizable overshoot of movement. With larger-scale movements, even when the loss of motion buffer is inaccurate, the sizable movement allows for the loss or gain of only a tiny distance.

Future Work

This semester's final prototype was accomplished through organized brainstorming, structured evaluation of ideas, and collaborative fabrication efforts. The culmination of these factors led to not only a working prototype, but an established design for future students and groups to build off of. With this in mind, there are specific aspects of this design, as well as unmet design criteria, that need to be addressed in future iterations to create a more functional, lab-ready prototype for the client. To narrow the subject, aside from labeling (Table 2), the improvements needed can be broken down into categories of fine tuning precision and accuracy and integration of automating software.

Table 2: PDS-outlined safety labels needed to comply with ISO and IEC standards (Appendix A).

	Signifies that the main plug must be disconnected from the wall outlet prior to maintenance [10].
	Indicates that the equipment labeled is suitable for the use of alternating current only [11].

While the final created design was functional in nature, there were some limitations of its capabilities that were imparted due to loss-of-motion related issues. To improve the functionality of this device, several improvements have been proposed for future groups to address. First, the heights of the stepper mounts that are integrated into the dual stepper mount need to be very slightly adjusted to make the gears align perfectly vertically. This does not currently affect their ability to mesh, but the team believes that it will improve the design nonetheless. The gears also need to be addressed. As mentioned in Fabrication Protocol (Appendix C), all of the set screws utilize an insert to allow the mounting of the gears through set screws. In the current design, the inserts have proven to be very prone to becoming dislodged or popping out, leading to a loose fit and subsequent loss of motion during operation. The inserts used (Figure 22, left) were the inserts available to the team at the MakerSpace, however, the team believes that a heat-set insert more suited for this application (Figure 22, right) may be a more solid fit and resist popping out of place.

Figure 22*:* Knurled threaded inserts used by our team (left) [12] and proposed alternative heat-set insert option for future teams (right) [13].

Regarding automation, the team has one main goal in mind. Successful integration of software to produce image stitching and sequencing capabilities. As proposed by the client, Dr. John Puccinelli, this would include the use of various free-to-download plugins, such as the Fiji ImageJ Image Stitching Plugin [14]. Ideally, programming done would make these plugins compatible with both the existing Nikon software [15] and the prototype created to motorize the stage. All new steps taken in fabrication will require rigorous testing to prove the levels of competency of the design. Thus, with the successful integration of these plugins, future teams will look to create methods for testing this design through independent brainstorming or by collaborating with BME faculty.

VIII. **Conclusions**

The efforts of this semester's Motorized Microscope BME design team sought to build off of that of past teams in an attempt to accomplish all client criteria. Unfortunately, as seen in multiple previous teams, the majority of the previous work on this project was scrapped in an attempt to explore new design avenues. Through collaboration with faculty of the UW-Madison Departments of Biomedical and Mechanical engineering and strict discipline to the principles of engineering design, this semester's team was to successfully create a proof of concept level functional prototype. This design utilized two stepper motors and multiple mountable gears to drive microscope stage movements in both the X and Y directions. These movements are commandable by both joystick and IDE input from the user. While currently effective as a stage panning tool, the design still needs to be iterated upon and improved in order to reach levels of precision needed to create a coordinate-based movement system. As revealed by statistical findings and qualitative observations of all prototypes, this new working prototype is the most competent solution to the client proposal to date. This is not to say that the job is done, but to emphasize the point that progress truly has been made, and future groups should look to improve and expand upon the current prototype rather than looking to starting from the beginning of the design process in hopes of creating a more optimal stage driving design.

IX. **References**

[1] "Nikon Ti-U Inverted Fluorescence Motorized Microscope Pred Ti2 - AV." Accessed: Dec. 06, 2023. [Online]. Available: https://www.bostonind.com/nikon-ti-u-inverted-fluorescence-motorized-microscope-pred-ti2-av

[2] R. A. A. Campbell, R. W. Eifert, and G. C. Turner, "Openstage: A Low-Cost Motorized Microscope Stage with Sub-Micron Positioning Accuracy," *PLOS ONE*, vol. 9, no. 2, p. e88977, Feb. 2014, doi: 10.1371/journal.pone.0088977.

[3] S. McDermott *et al.*, "Multi-modal microscopy imaging with the OpenFlexure Delta Stage," *Opt. Express*, vol. 30, no. 15, pp. 26377–26395, Jul. 2022, doi: 10.1364/OE.450211.

[4] "LBNL Electrical Safety Manual.pdf." Accessed: Sep. 22, 2023. [Online]. Available: https://www2.lbl.gov/ehs/pub3000/CH08/LBNL%20Electrical%20Safety%20Manual.pdf

[5] "ISO 7010 - M006, Disconnect mains plug from electrical outlet." Accessed: Sep. 22, 2023. [Online]. Available: https://www.iso.org/obp/ui#iso:grs:7010:M006

[6] "BME Lab - 1002 ECB - Biomedical Experimental Teaching Lab." Accessed: Dec. 14, 2023. [Online]. Available: https://sharedlab.bme.wisc.edu/labs/1002/

[7] "Backlash - an overview | ScienceDirect Topics." Accessed: Dec. 13, 2023. [Online]. Available: https://www.sciencedirect.com/topics/engineering/backlash

[8] "DANotes: Spur gears: Gear meshing." Accessed: Dec. 13, 2023. [Online]. Available: http://www-mdp.eng.cam.ac.uk/web/library/enginfo/textbooks_dvd_only/DAN/gears/meshing/meshing.html

[9] "Fiji," ImageJ Wiki. Accessed: Dec. 14, 2023. [Online]. Available: https://imagej.github.io/software/fiji/index

[10] "ISO 7010 - M006, Disconnect mains plug from electrical outlet." Accessed: Sep. 22, 2023. [Online]. Available: https://www.iso.org/obp/ui#iso:grs:7010:M006

[11] "IEC 60417 - 5032, Alternating current." Accessed: Sep. 22, 2023. [Online]. Available: https://www.iso.org/obp/ui#iec:grs:60417:5032

[12] "M3 x 6mm(L) x 5mm(OD) Brass Knurled Threaded Insert Embedment Nuts 50 Pcs," Walmart.com. Accessed: Dec. 14, 2023. [Online]. Available: https://www.walmart.com/ip/M3-x-6mm-L-x-5mm-OD-Brass-Knurled-Threaded-Insert-Embedment-Nuts-50-Pcs/986857536

[13] "McMaster-Carr." Accessed: Dec. 14, 2023. [Online]. Available: https://www.mcmaster.com/

[14] "Image Stitching," ImageJ Wiki. Accessed: Dec. 14, 2023. [Online]. Available: https://imagej.github.io/plugins/image-stitching

[15] "AX / AX R with NSPARC | Comprehensive Imaging Software," Nikon Instruments Inc. Accessed: Dec. 14, 2023. [Online]. Available: https://www.microscope.healthcare.nikon.com/products/confocal-microscopes/ax/software?gclid=Cj0KCQiA7OqrBhD9ARIsAK3UXh0ZBtkh6hU5VBElSx4H2AxChpiS7kScwKKD52EFcLtnUMGN0EfBGcUaAuS_EALw_wcB

X. **Appendix**

Appendix A: Product Design Specifications

Product Design Specifications: Microscope Low Cost Motorized Stage

September 22, 2023

BME 300/200

Clients: Dr. John Puccinelli

Advisor: Dr. Joshua Brockman

Team Members:

Team Leader: Tyler Haupert

Communicator: Nicholas Symons

BWIG: Sawyer Bussey

BPAG: Jerry Zhaoyun

BSAC: Julia Salita

Function:

The inverted fluorescence microscopes of the UW-Madison BME Teaching Lab are manually controlled microscopes that allow users to observe and collect data on cell and tissue culture. While the technology exists to convert these microscopes into motorized and automated devices, it is very expensive and beyond the budget of the school. The client, Dr. John Puccinelli, has requested the fabrication of a device to serve as a solution to this problem. The final working prototype should include mechanical, software, and hardware components to allow for the automation of manual inverted fluorescence microscopes. The physical structures of this device will interface with the manual adjustment knob on the right-hand side of the microscope. It will be capable of moving the stage in a coordinate-based fashion in both the X and Y directions. Software elements will be created to direct the movement of the stage. Finally, the client has also requested the development of software to process and stitch input images to add a scanning feature to the microscopes.

Client Requirements:

1. The device must be a motorized mechanism that controls the stage movement through the manual stage adjustment knobs.
2. The stage should be movable by using a joystick, computer keys, or by inputting values into the user interface.
3. The movements of the stage should be precise down to the micron range, with acceptable deviations within one order of magnitude.
4. The software created must be integrated into the existing NIS-elements software and assist in both taking images of the field of view and stitching them together.
5. The device will be powered by the wall outlets in the lab.
6. The project must remain under a final cost of 100 US dollars.

Design Requirements:

1. Physical and Operational Characteristics:

a. *Performance Requirements:*

. The device should be able to adjust the microscope stage in both the x-axis and the y-axis using the manual adjustment knobs

. The software must be able to participate in image sequencing and be easy to use
. The field of view should be movable by using an interfaced joystick or computer keys such as the keypad arrows

b. Safety

i. The device should not be hazardous.
ii. The device should not harm the user in any way, including electrical shock [1], physical pinching, or loud sound levels.
iii. The device should not damage the microscope while ensuring smooth operation.
iv. The cords of the device should be safely arranged so that it does not block off the user's workspace. Moreover, the cords should not be placed near or be in contact with any liquid.
v. Labeling

	Signifies that the main plug must be disconnected from the wall outlet prior to maintenance [2].
	Indicates that the equipment labeled is suitable for the use of alternating current only [3].
	Specifies that the operator's manual should be referenced and used during use of device [4].

c. Accuracy and Reliability

i. The device should have a movement resolution of 1µm.
ii. The movements should be repeatable without having to recalibrate the device.

d. Life in Service

i. The device should be reliable and last at least 10 to 15 years [5].
ii. The stepper motors have a lifetime of 20,000 hours[6], which translates to 2,500 8 hour work days or 500 5 day work weeks. This matches our requirement of a 10-15 year lifetime.
iii. The device should not break easily and withstand daily wear and tear.
iv. The device should be capable of undergoing regular sanitation via autoclaving and/or harsh cleaning chemicals.

e. Shelf Life

i. To ensure the longevity of the device while stored, the device should be kept dry and at regular room temperature and pressure.
ii. All materials used for the device should be stable at standard lab temperature and humidity conditions.
iii. The device should be able to be stored either attached or detached from the microscope at normal room conditions.

f. Operating Environment

i. The laboratory will be kept within a temperature range of 20-25 degrees celsius with a relative humidity of 35-50 percent [7].
ii. The device will be kept in the BME teaching lab and should be able to operate in the above conditions.

g. Ergonomics

i. The device must be small and not disrupt the normal operation of the Nikon TI-U and Olympus IX71 microscopes.
ii. The software must be operable with the nikon elements software and must have a user-friendly interface.

h. Size

i. The device should take little to no table space next to the microscope.
ii. Ideally, the entire device should be encased to minimize device interference and malfunction due to exposure.

i. *Weight*

i. The device should be lightweight to minimize interference and damage to the function of the microscope.
ii. Weight should not limit usage and accessibility of the microscopes for all users.

j. Materials

i. All materials purchased, altered, and used must comply with the guidelines for a biosafety level 1 laboratory listed in the Biosafety in Microbiological and Biomedical Laboratories (BMBL) 6th Edition [8] by the Centers for Disease Control and Prevention (CDC) [9].
ii. 3D printing should be utilized to print most plastic prototypes using the FDM and FFF printing methods [10], [11].
iii. The Universal ILS9.150D [12] laser cutter will be used to accurately cut precise pieces necessary for maintaining accuracy of movement of the microscope stage.
iv. Soldering [13] may be used to stabilize the electronic connections within the necessary circuitry.
v. All included materials must be resistant to the degradative effects of harsh chemicals used for regular sanitization of lab equipment.
vi. Plastic gears should be used rather than metal gears to eliminate the need for lubricant, this would decrease the amount of maintenance needed in order to keep the device operational [14]. Additionally, plastic materials will also help to lower cost.
vii. Plastic materials expand and lose structure at increasing temperatures. Thus, material choice should consider the rate at which different plastic materials heat or cool.
viii. Materials used for gears should be made out of a plastic with a low thermal diffusivity, which is defined as the thermal conductivity ratio to the specific heat capacity of the material. Materials of large Thermal Diffusivity will respond quickly to changes in heat and Materials of low Thermal Diffusivity will respond slowly [15]. Thermal Diffusivity of PVC (7.8E-6 m^2/s) [16], this is a low Thermal Diffusivity meaning the material heats up slowly. The equation for this value is: =k/pCp

1. a= thermal diffusivity
2. k= material conductivity
3. p=density of material
4. Cp=specific heat of material

k. Aesthetics, Appearance, and Finish

i. The device should not be distracting to the user.
ii. The final product should be neat and blend in with surrounding equipment.
iii. All edges should be smooth and not pose a threat to users operating the device.

l. Spatial Configuration

i. The device should not hinder or block movement of the existing mechanical components of the microscope
ii. The device should be secure and stable on the points that it mounts to the microscope.

1. Ex. screw holes, clamp points, adhesion points.

2. Product Characteristics

a. Quantity:

. Only one device will be manufactured for the client
. The device should be replicable in order to produce additional products if necessary or to potentially be mass produced.

b. Target Product Cost:

i. The target budget is to remain under a total of $100 for the final cost of the device.
ii. The allocated budget for development is $300.
iii. The team should use previously purchased materials to keep costs low and reduce waste, however, the team should present the final total price to reflect the total cost if the device is to be replicated.

3. Miscellaneous

a. Standards and Specifications

. All aspects of the device's design must comply with the many guidelines provided by the CDC for biosafety level 1 laboratories [8].
. The device should follow all guidance outlined in the FDA's "Chemical, Metals, Natural Toxins & Pesticides Guidance Documents & Regulations" to ensure safety and producibility should the device be reproduced [17].
. The following standards are to be referenced and used as guidelines throughout the development and implementation electrical systems designs [18].

01 Standard: Quality Management System.
001 Standard: Environmental Management System.
IC Standard: System and Organisation Controls
001 Standard: Information Security Management.
001 Standard: Occupational Health and Safety Management System.
002 Standard: Complaint Management Systems
DPR Standard: General Data Protection Regulation

b. Customer

i. While the team's client has a sole interest in the design, there is a potential for a more broad potential application of our design. If fabrication methods can be simplified and streamlined, it is likely that many universities and budget-aware labs would be keen to utilize our low-cost solution to the problem of motorizing and automating manual microscopes.

c. Patient-Related Concerns

i. The device should not inflict any danger to the surrounding users and equipment
ii. This device should be capable of undergoing regular maintenance and cleaning with harsh chemicals [8].
iii. No paper, cardboard, or other organic materials should be utilized in the final design.

d. Competition

i. The OpenFlexture project is an open-sourced, 3-D printable microscope that can be created and constructed for approximately $200, with multiple stages available to add motorized and automated functionality [19].
ii. One example of market-available motorized stages is Zaber's ASR series motorized XY microscope stages [20].
1. While these are functional, accurate to within 12 µm, and available, they do not meet client criteria due to cost and the way they interact with the microscope.
iii. Detailed in a 2017 article, a group of German-based scientists created an automated, motorized, 3-D printed inverted fluorescence microscope. The article includes all necessary CAD and software files for construction, as well as a step-by-step instruction manual to aid users in building their device [21].

References:

[1] "LBNL Electrical Safety Manual.pdf." Accessed: Sep. 22, 2023. [Online]. Available: https://www2.lbl.gov/ehs/pub3000/CH08/LBNL%20Electrical%20Safety%20Manual.pdf

[2] "ISO 7010 - M006, Disconnect mains plug from electrical outlet." Accessed: Sep. 22, 2023. [Online]. Available: https://www.iso.org/obp/ui#iso:grs:7010:M006
[3] "IEC 60417 - 5032, Alternating current." Accessed: Sep. 22, 2023. [Online]. Available: https://www.iso.org/obp/ui#iec:grs:60417:5032
[4] "ISO 7000 - 1641, Operator's manual; operating instructions." Accessed: Sep. 22, 2023. [Online]. Available: https://www.iso.org/obp/ui#iso:grs:7000:1641
[5] R. Pieper, S. Schini, and J. Cohn, "BME 400: Biomedical Engineering Design".
[6] "Nema 17 Stepper Motor L=40mm Gear Ratio 100:1 MG Series Planetary Gearbox - 17HS15-1584S-MG100|STEPPERONLINE." Accessed: Sep. 22, 2023. [Online]. Available: https://www.omc-stepperonline.com/nema-17-stepper-motor-l-40mm-gear-ratio-100-1-mg-series-planetary-gearbox-17hs15-1584s-mg100
[7] "download.pdf." Accessed: Sep. 22, 2023. [Online]. Available: https://www.fda.gov/media/73912/download
[8] "Biosafety in Microbiological and Biomedical Laboratories (BMBL) 6th Edition | CDC Laboratory Portal | CDC." Accessed: Sep. 20, 2023. [Online]. Available: https://www.cdc.gov/labs/BMBL.html
[9] M. L. Bayot and K. C. King, "Biohazard Levels," in *StatPearls*, Treasure Island (FL): StatPearls Publishing, 2023. Accessed: Sep. 20, 2023. [Online]. Available: http://www.ncbi.nlm.nih.gov/books/NBK535351/
[10] "FDM vs. FFF: Differences and Comparison | Xometry." Accessed: Sep. 20, 2023. [Online]. Available: https://www.xometry.com/resources/3d-printing/fdm-vs-fff-3d-printing/
[11] "3D Print Guide – UW Makerspace – UW–Madison." Accessed: Sep. 20, 2023. [Online]. Available: https://making.engr.wisc.edu/3d-printing-the-makerspace/
[12] "Laser Cutters," UW Makerspace. Accessed: Sep. 20, 2023. [Online]. Available: https://making.engr.wisc.edu/laser-cutters/
[13] "Electronics – UW Makerspace – UW–Madison." Accessed: Sep. 20, 2023. [Online]. Available: https://making.engr.wisc.edu/electronics/
[14] "Experimental tests to predict plastic gears' lifetime | Gear Solutions Magazine Your Resource to the Gear Industry." Accessed: Sep. 22, 2023. [Online]. Available: https://gearsolutions.com/features/experimental-tests-to-predict-plastic-gears-lifetime/
[15] "Thermal Diffusivity | Definition | nuclear-power.com," Nuclear Power. Accessed: Sep. 22, 2023. [Online]. Available: https://www.nuclear-power.com/nuclear-engineering/heat-transfer/thermal-conduction/heat-conduction-equation/thermal-diffusivity/
[16] E. B. Ettah, J. G. Egbe, S. A. Takim, U. P. Akpan, and E. B. Oyom, "Investigation of the Thermal Conductivity of Polyvinyl Chloride (Pvc) Ceiling Material Produced In Epz Calabar, For Application Tropical Climate Zones".
[17] C. for F. S. and A. Nutrition, "Chemical, Metals, Natural Toxins & Pesticides Guidance Documents & Regulations," FDA. Accessed: Sep. 22, 2023. [Online]. Available: https://www.fda.gov/food/guidance-documents-regulatory-information-topic-food-and-dietary-supplements/chemical-metals-natural-toxins-pesticides-guidance-documents-regulations
[18] "ISO Certification for Electrical and Electronic | ISO 9001, 14001, 45001," SIS Certifications. Accessed: Sep. 22, 2023. [Online]. Available: https://www.siscertifications.com/electrical-and-electronic/
[19] "The OpenFlexure project." Accessed: Sep. 21, 2023. [Online]. Available: https://openflexure.org/
[20] "ASR Series - Motorized Microscope Stages, XY - Zaber." Accessed: Sep. 21, 2023. [Online]. Available: https://www.zaber.com/products/scanning-microscope-stages/ASR
[21] D. Schneidereit, L. Kraus, J. C. Meier, O. Friedrich, and D. F. Gilbert, "Step-by-step guide to building an inexpensive 3D printed motorized positioning stage for automated high-content screening microscopy," *Biosens. Bioelectron.*, vol. 92, pp. 472–481, Jun. 2017, doi: 10.1016/j.bios.2016.10.078.

Appendix B: Materials and Costs

Table 1: Total cost to re-fabricate a new mechanical positioning device.

Description	Manufacturer	Mft Pt#	Vendor	Vendor Cat#	Date	QTY	Cost Each	Total
12V 4A Power Supply for the motors	COOLM	P2-12V4A	Amazon/Makerspace	B07H493GHX	10/23/2023	1	$12.99	$12.99
3D-printed components of the device			Makerspace			347g of PLA	$0.08/gram	$27.76
MGN12H Mini Linear Rail Guide,200mm Linear Sliding Gide with Carriage Block			Amazon			1	$15.99	$15.99
two Nema 17 Stepper Motor Bipolar from previous group	Nema	17HS19-1684S-PG51	StepperOnline.com			2	$31.38	$62.76

Screws used to secure components in places and wires used for the Arduino			Makerspace			N/A	$7.00	$7.00
DEXAS 12 x 16 Poly Granite Cutting Board in Midnight Granite Used to fabricate the GMP	Dexas	452-50W	Walmart			1	$12.44	$12.44
Arduino used to program the stepper motors	Arduino		Makerspace			1	$10.00	$10.00
Usongshine TB6600 4A 9-42V Nema 17 Stepper Motor Driver CNC Controller Single Axes Phase Hybrid Stepper Motor for CNC/42 57 86 Stepper Motor（1 pcs)	Usongshine		Amazon			2	$9.98	$19.96
							TOTAL:	**$168.90**

Appendix C: Fabrication Protocols

3D Printed Components:

Steps to 3D print components of the final design:

1. Open part file in SolidWorks
2. Hit “Save As” and select the “.STL” file type option
3. Grab a flash drive from the bins by the MakerSpace 3D printing PCs
4. Load all .STL files you would like to print onto the flash drive
5. With assistance from MakerSpace staff, load all .STL files on to a Bambu Labs plate and prepare using the following settings
    a. Infill: 20%
    b. Resolution: Fine (0.8mm)
        i. Note: not all components need this resolution, but the gears absolutely do.
    c. Supports: Enabled
        i. Support Type: Standard
    d. Filament: Black PLA
6. Once all settings are selected, hit slice, export the .3mf file, and fill out the 3D printing form to have staff start the print
    a. Note: It is advised that as many parts are printed on the Bambu Labs printer at once as possible, due to the flat rate fee of $2 per print when using these printers. The Ulitimakers can be used to print without this flat fee, however, it is worth noting that they are much slower and have much lower resolution than the Bambu Labs printers.

Steps to melt inserts into the stepper and knob gears:

1. Remove the gears from the printer.
2. Using needle nose pliers, X-Acto knives, and tweezers, remove all supports from the 3D prints.
3. Select necessary insert for the application. Using current files, this would mean
    a. Stepper gears: M3 x 6mm x 5mm
    b. Knob Gears: M4 x 6mm x 6mm
4. Turn a soldering iron on.
5. Place the gear in a clamp with the whole you plan on melting the insert into facing up.
6. Using a rubber-coated tweezers, hold the insert up to the tip of the soldering iron and as it heats, gently apply downward pressure with the iron to slowly melt the insert into the hole.

    a. Note: if inserts are filling with plastic, try repeating this process with a screw already in the insert to stop melted plastic from entering the threads.
7. After the plastic has cooled, use the tweezers to clean up the excess on the inside of the print to ensure the knob/shaft will be able to fit flush into the inner hole of the gear.

Steps to mount sled mount to rail carriage:

1. Remove the sled mount from the printer.
2. Using needle nose pliers, X-Acto knives, and tweezers, remove all supports from the 3D prints.
3. Using the provided screws (M3 x 10mm), screw the sled mount into the threaded holes of the carriage.
4. If the print is completed using current files, the holes will be slightly too small for the supplied screws. In this case, the user will need to use a drill to make the holes slightly larger to allow the screw to pass through the sled mount and pin it to the carriage below.

Appendix D: Computer-Aided Design (CAD) Files

Located in this folder is a combination of part, assembly, and STL files created and organized for future groups. All future groups have full permission to download, modify, and reuse these files as they see fit.

Appendix E: Arduino Code

Located in this folder are the Arduino files that the team used for initial testing of the electronics and testing of the final design.

Appendix F: Testing Protocols

Direct Connection Testing Protocol:

1. Place a slide with fluorescent bead on the stage, with the coverslip facing down.
2. Turn on and set microscope settings to achieve the best view for moving approximately 500 µm, while overlapping a landmark with the initial position view. (Allow about a 550-600 µm field of view in the x direction)
3. Connect the universal joint connector to the x-axis manual knob (bottom knob) of the microscope, ensuring a secure fit.
4. Connect the universal joint connector to the stepper motor ensuring a secure fit.
5. Ideally, the universal joint should encounter no interference when operating, however, should the joint encounter interference set up in the least interference position as possible. If interference occurs, determine when interference occurs. Position the joint in a manner so that there is no interference for at least two movements of the device.
6. Automate the device to move in one direction until loss of motion is eliminated.
7. Capture and save a starting image.
8. Deploy the code to the electronics. The motor should then turn 500 steps.
9. Capture and save a final image.

10. Repeat steps 5-9 until ten or more trials are recorded.

Note you should end with at least 10 data points and at least 20 images before analysis

Loss of Motion Testing Protocol:

1. Place a slide with fluorescent bead on the stage, with the coverslip facing down.
2. Turn on and set microscope settings to achieve the best view for moving up to 600 µm, while overlapping a landmark with the initial position view. (Allow about 650 µm field of view along the desired axis).
3. Connect the motorized positioning device to the manual control knobs.
4. Automate the device to move in one direction along the X-axis until loss of motion is eliminated.
5. Capture and save a starting image.
6. Automate the motor to turn 400 steps in the opposite direction.
7. Capture and save a final image.
8. Repeat steps 4-7 until ten or more trials are recorded.
9. Repeat steps 4-8 for:
    a. Along the X-axis but turn 600 steps
    b. Along the Y-axis and turn 400 steps
    c. Along the Y-axis but turn 600 steps

Note you should end with at least 40 data points and at least 80 images before analysis

Loss of Motion Testing Protocol:

1. Place a slide with fluorescent bead on the stage, with the coverslip facing down.
2. Turn on and set microscope settings to achieve the best view for moving approximately 400 µm, while overlapping a landmark with the initial position view. (Allow about a 500 µm field of view along the desired axis)
3. Connect the motorized positioning device to the manual control knobs.
4. Automate the device to move in one direction along the X-axis until loss of motion is eliminated.
5. Capture and save a starting image.
6. Automate the motor to turn 200 steps in the same direction.
7. Capture and save a final image.
8. Repeat steps 4-7 until ten or more trials are recorded.
9. Repeat steps 4-8 for:
    a. Along the X-axis but turn 400 steps
    b. Along the Y-axis but turn 150 steps
    c. Along the Y-axis but turn 400 steps

Note you should end with at least 40 data points and at least 80 images before analysis

Appendix G: Raw Data

Located in this folder is all of our testing data, including the start and end images, the Fiji:ImageJ overlays, and the combined data spreadsheet.

Conclusions/action items:

Final Report is done and ready for submission.

TYLER HAUPERT - Dec 15, 2023, 8:34 PM CST

Download

Motorized_Microscope-Final_Report-12_13_2023.pdf (6.56 MB)

Power Adapter

NICHOLAS SYMONS - Nov 02, 2023, 10:19 AM CDT

Title: Power Adapter

Date: 11/2/23

Content by: Nick Symons

Present:

Goals: To purchase an AC/DC power adapter to be used with the stepper motors and drivers.

Citations:

Content: We ordered a power adapter through Amazon from the Makerspace last week and just picked it up yesterday. This is the link to the adapter that we ordered. It is a 12V, 4A power adapter with an adapter at the end that lets us directly attach the positive and negative power wires from the drivers.

It cost $15.50 after shipping was added.

Conclusions/action items: We need to make sure this information gets onto the BPAG spreadsheet.

Direct connection testing protocol

JULIA SALITA - Dec 01, 2023, 12:52 PM CST

Title: X-axis displacement direct connection testing protocol

Date: 12/1/2023

Content by: Julia Salita

Present: Julia Salita

Goals: to write an official testing protocol for testing the displacement caused by directly connecting the stepper motor to the x-axis manual control knob of the microscope

Citations: team meeting notes, meeting 10

Content:

1. Materials:
    1. universal joint connector
    2. the microscope to test with
    3. stepper motor accompanied by the necessary electronics and software to operate.
    4. measuring device capable of measuring stage displacement
2. Procedure:
    1. Align the top portion of the microscope stage to be flush with the bottom portion of the microscope stage.
    2. Connect the universal joint connector to the x-axis manual knob (bottom knob) of the microscope, ensuring a secure fit.
    3. Connect the universal joint connector to the stepper motor ensuring a secure fit.
    4. Ideally, the universal joint should encounter no interference when operating, however, should the joint encounter interference set up in the least interference position as possible. If interference occurs, determine (by trial and error) how far the motors can rotate before interference occurs. For the purposes of the joint used 4000 steps were achieved before interference occurred.
    5. Once the set up is complete deploy the the code to the electronics. The motor should then turn 1000 steps at a time until the desired amount of steps is achieved
    6. Using the measuring device measure the displacement of the stage in the x-direction and record the value.
    7. Repeat all steps until desired amount of data is obtained.

Conclusions/action items:

- we used this to do the direct connection but we might want to do it again with calipers
- also just to get more trials and to test consistency
- also put data collected into a nicer chart

Direct turn of knob protocol

JULIA SALITA - Dec 01, 2023, 1:10 PM CST

Title: X-axis displacement direct connection testing protocol

Date: 12/1/2023

Content by: Julia Salita

Present: Julia Salita

Goals: to write an official testing protocol for testing the displacement caused by directly turning the manual know 180 and 360 degrees

Citations: team meeting notes, meeting 10

Content:

1. Materials:
    1. the microscope to test with
    2. measuring device capable of measuring stage displacement
2. Procedure:
    1. Align the top portion of the microscope stage to be flush with the bottom portion of the microscope stage.
    2. turn the knob 180 degrees
    3. Using the measuring device measure the displacement of the stage in the x-direction and record the value under 180 degrees turn.
    4. Repeat all steps until desired amount of data is obtained.
    5. Restart and repeat steps but turn the knob 360 degrees and record the value under 360 degrees turn.

Conclusions/action items:

- want to do it again with calipers
- find way to make sure it is 180 degrees turn
- also just to get more trials and to test consistency
- also put data collected into a nicer chart

Stress test in solid works

JULIA SALITA - Dec 02, 2023, 2:37 PM CST

Title: Solid works stress test of stepper motor mount

Date: 12/1/2023

Content by: Julia Salita

Present: Julia Salita

Goals: To stress test the part of the motor mount that holds the motor up to determine if it is stable and the largest load that can be applied

Citations: SOLIDWORKS lab 2 from BME 201

Content:

So I couldn't actually get the SOLIDWORKS files to open which means I could not do trial and error to figure out a procedure

Conclusions/action items:

Not enough time now to do stress testing with the files not working this is something that future groups could work on.

to use microscope

JULIA SALITA - Dec 02, 2023, 2:35 PM CST

Title: Microscope set up for motorized device testing

Date: 12/1/2023

Content by: Julia Salita

Present: Everyone

Goals: to learn the settings and how to set up the microscope for testing

Citations: Dr. Joshua Brockman

Content:

Can look at video Tyler took as well

1. video set up
2. cover slip down and roughly center
3. focus on sample
    1. light suorce
    2. optical configurations- top or right of screen ftsc
    3. go live to see camera
    4. use dial to focus- fine adjust or course adjust- counter clockwise to go up until seeing beads clearly
4. make sure saturation makes sense- look at bottom graph to make sure tallest point is in graph
5. 12 bit no binning for live and capture
6. no automatic save!!! so set it
    1. assign current camera setting by right clicking
7. the ND filters are not in the elements software so right what you use
8. to take picture click capture and save to specific folder
9. take image before and image after then back to start
10. overlay in image j
    1. image colors merge channels
    2. so now can easily figure out where start and end
    3. can measure distances
    4. length should be calibrated
11. time lapse in elements to have the video movement acquire capture timelapse
    1. makes big image

Conclusions/action items:

Conduct direct testing with the device!

Direct connection Final testing protocol

JULIA SALITA - Dec 15, 2023, 3:33 PM CST

Title: Direct connection protocol using the microscope

Date: 12/15/2023 -wrote the official one on the 14th and a rough version that I don't have anymore, since I wrote it on a whiteboard and it got erased before I could take a picture on the 2nd of December though- Sorry!

Content by: Julia Salita

Present: Julia Salita

Goals: To write a full direct connection testing protocol

Citations:

Content:

Direct Connection Testing Protocol:

1. Place a slide with fluorescent bead on the stage, with the coverslip facing down.
2. Turn on and set microscope settings to achieve the best view for moving approximately 500 µm, while overlapping a landmark with the initial position view. (Allow about a 550-600 µm field of view in the x direction)
3. Connect the universal joint connector to the x-axis manual knob (bottom knob) of the microscope, ensuring a secure fit.
4. Connect the universal joint connector to the stepper motor ensuring a secure fit.
5. Ideally, the universal joint should encounter no interference when operating, however, should the joint encounter interference set up in the least interference position as possible. If interference occurs, determine when interference occurs. Position the joint in a manner so that there is no interference for at least two movements of the device.
6. Automate the device to move in one direction until loss of motion is eliminated.
7. Capture and save a starting image.
8. Deploy the code to the electronics. The motor should then turn 500 steps.
9. Capture and save a final image.
10. Repeat steps 5-9 until ten or more trials are recorded.

Note you should end with at least 10 data points and at least 20 images before analysis

Conclusions/action items:

1. microscope set up may be different for every group depending on what you do/alter when testing.

Loss of motion Final testing protocol

JULIA SALITA - Dec 15, 2023, 3:34 PM CST

Title: Direct connection protocol using the microscope

Date: 12/15/2023 -wrote the official one on the 14th and a rough version that I don't have anymore, since I wrote it on a whiteboard and it got erased before I could take a picture on the 2nd of December though- Sorry!

Content by: Julia Salita

Present: Julia Salita

Goals: To write a full loss of motion testing protocol

Citations:

Content:

Loss of Motion Testing Protocol:

1. Place a slide with fluorescent bead on the stage, with the coverslip facing down.
2. Turn on and set microscope settings to achieve the best view for moving up to 600 µm, while overlapping a landmark with the initial position view. (Allow about 650 µm field of view along the desired axis).
3. Connect the motorized positioning device to the manual control knobs.
4. Automate the device to move in one direction along the X-axis until loss of motion is eliminated.
5. Capture and save a starting image.
6. Automate the motor to turn 400 steps in the opposite direction.
7. Capture and save a final image.
8. Repeat steps 4-7 until ten or more trials are recorded.
9. Repeat steps 4-8 for:
    a. Along the X-axis but turn 600 steps
    b. Along the Y-axis and turn 400 steps
    c. Along the Y-axis but turn 600 steps

Note you should end with at least 40 data points and at least 80 images before analysis

Conclusions/action items:

1. microscope set up may be different for every group depending on what you do/alter when testing.

Linear Motion Final testing protocol

JULIA SALITA - Dec 15, 2023, 3:35 PM CST

Title: Direct connection protocol using the microscope

Date: 12/15/2023 -wrote the official one on the 14th and a rough version that I don't have anymore, since I wrote it on a whiteboard and it got erased before I could take a picture on the 2nd of December though- Sorry!

Content by: Julia Salita

Present: Julia Salita

Goals: To write a full Linear Motion testing protocol

Citations:

Content:

Loss of Motion Testing Protocol:

1. Place a slide with fluorescent bead on the stage, with the coverslip facing down.
2. Turn on and set microscope settings to achieve the best view for moving approximately 400 µm, while overlapping a landmark with the initial position view. (Allow about a 500 µm field of view along the desired axis)
3. Connect the motorized positioning device to the manual control knobs.
4. Automate the device to move in one direction along the X-axis until loss of motion is eliminated.
5. Capture and save a starting image.
6. Automate the motor to turn 200 steps in the same direction.
7. Capture and save a final image.
8. Repeat steps 4-7 until ten or more trials are recorded.
9. Repeat steps 4-8 for:
    a. Along the X-axis but turn 400 steps
    b. Along the Y-axis but turn 150 steps
    c. Along the Y-axis but turn 400 steps

Note you should end with at least 40 data points and at least 80 images before analysis

Conclusions/action items:

1. microscope set up may be different for every group depending on what you do/alter when testing.

Direct connection x-axis testing

JULIA SALITA - Dec 02, 2023, 2:47 PM CST

Title: Direct connection x-axis testing

Date: 12/1/2023

Content by: Julia Salita

Present: Julia Salita

Goals: to clean up and organize collected data from direct connection testing

Citations: Team meeting notes, meeting 10

Content:

1. The procedure was only conducted 3 times
2. The use of calipers was not achievable at the time -probably should redo and use calipers

Trial #	Steps the Motor Moved	Displacement (CM)	Converted Displacement (µm)	µm/step
Trial 1	4000	0.40	4000	1
Trial 2	4000	0.45	4500	1.125
Trial 3	4000	0.45	5000	1.25

Conclusions/action items:

1. means we can get micron movement with the current stepper motors
2. do more testing -re test an do more trials
3. try with the created driving mechanism to see if micron movement is also achievable
4. realize that partial steps can be done with the motors so can also move smaller amounts

Direct turn of knob protocol

JULIA SALITA - Dec 01, 2023, 1:17 PM CST

Title: direct turn of knob protocol

Date: 12/1/2023

Content by: Julia Salita

Present: Julia Salita

Goals: to clean up and organize collected data from direct turning testing

Citations: Team meeting notes, meeting 10

Content:

1. The procedure was only conducted once for each
2. The use of calipers was not achievable at the time -probably should redo and use calipers

Trial #	180° Displacement (cm)	180° Displacement (µm)	360° Displacement (cm)	360° Displacement (µm)
Trial 1	0.95	9500	1.9	19000
Trial 2				
Trial 3				

Conclusions/action items:

1. do more testing -re test an do more trials
2. redo with calipers as well

Final testing data- raw data

JULIA SALITA - Dec 15, 2023, 3:46 PM CST

Title: Final testing data- raw data

Date: 12/15/2023

Content by: Julia Salita

Present: Julia Salita

Goals: to document/link the raw data

Citations:

Content:

here is the link to access the raw data that was collected

https://drive.google.com/drive/folders/1b5aV5NUM7ThLXcoXPpNiyXMd4Xkylx_a

Conclusions/action items:

1. For the most part the data we got was good and only a few things could be a source of error as outlined in the testing section of the final report
2. For results and Analysis see the Results section of the final report
3. See imbedded link on the website to view the final report
4. https://bmedesign.engr.wisc.edu/projects/f23/motorized_stage

9/28/2023 - Linear Rails Design

Title: Linear Rails Design

Date: 9/28/2023

Content by: Nick

Present: Nick

Goals: Create Linear rails CAD file and description for design matrix

Content:

I put linear gears on the side and back of the microscope stage. At this point I dont have any specific measurements for the gears other than the length which I put as 5 inches because that's a little bit bigger than the range of motion of the stage (range of motion is max 4.48 in., found on ECLIPSE Ti2-U Inverted Microscope for ICSI_4p_2CE-MRRL-1(for NII NIE) (nikon.com))

The stepper motors are oriented vertically next to and underneath the stage so that a spur gear can mesh with the linear gear. Again, I didn't do any kind of measurements for the spur gear, I just made a quick model to show what it would look like.

The stepper motors are attached to linear rails so that they can move perpendicular to the stage but stay stationary in the parallel direction. This makes it so the motors can move the stage but also move with the stage when the other motor is moving the stage.

Problems:

Because there is only one rail for each motor, the motors are free to turn on the rails axis which is a big problem. We would need to figure out how to stabilize the motors so they don't rotate.

The spur gear on the motor needs some kind of tension to keep it meshed with the linear gear. I think having some kind of elastic band wrapped around the motor and then attached under the stage would provide enough force to keep the gears meshed, but then there would be a problem with differing tensions as the motor moves to the extremities of the linear gear.

We would need to find somewhere to attach the linear rails and linear gears.

The linear rails will need to be perfectly perpendicular to the linear gears, and if they get bumped into a new position it would introduce error.

Good things:

This design leaves the manual knobs untouched so they can be used at any time without removing the motors/gears.

The motors/gears would be on the side and back of the stage, which is out of the way and out of sight.

This design removes the variable of having to interact with the manual knob and instead interacts directly with the stage.

Conclusions/action items:

This design now needs to be presented to the team. Following this, we will evaluate it and the other designs in the design matrix.

TYLER HAUPERT - Sep 29, 2023, 9:43 AM CDT

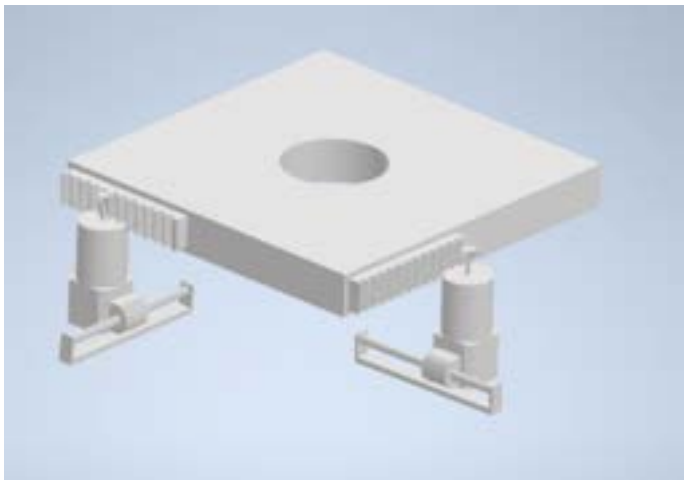

Download

Isometric_view_1_.png (303 kB)

TYLER HAUPERT - Sep 29, 2023, 9:44 AM CDT

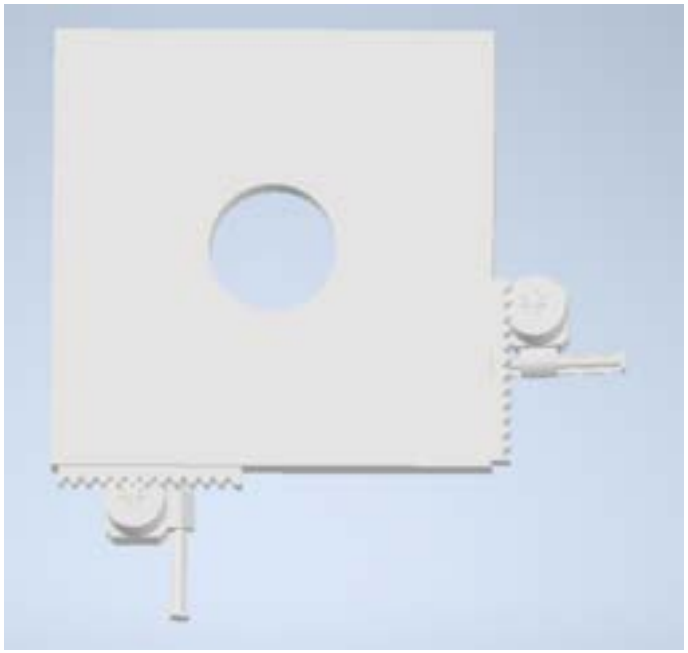

Download

Top_view.png (176 kB)

Spur Gear Design

NICHOLAS SYMONS - Oct 12, 2023, 10:41 AM CDT

Title: Spur Gear Design

Date: 10/12/23

Content by: Nick

Present:

Goals: To make a CAD model and description for the preliminary report.

Citations:

Content: The spur gear design was originally drawn up by Tyler, I just made a CAD model of it for our report.

Description:

The spur gear design is attached directly under the stage and interacts with the existing control knob. In this design each motor is directly connected to a spur gear. When it rotates, its horizontal alignment and connection with a spur gear would move the control knob to turn, thereby moving the stage in the X and Y direction. The main advantage of this design is that it reduces the size of the device and the space it occupies on the countertop.

Conclusions/action items: We now need to start thinking about how we will utilize the available screw holes to attach the motors to the underside of the stage and how we will keep enough pressure against the gears to keep them interlocked.

NICHOLAS SYMONS - Oct 12, 2023, 10:39 AM CDT

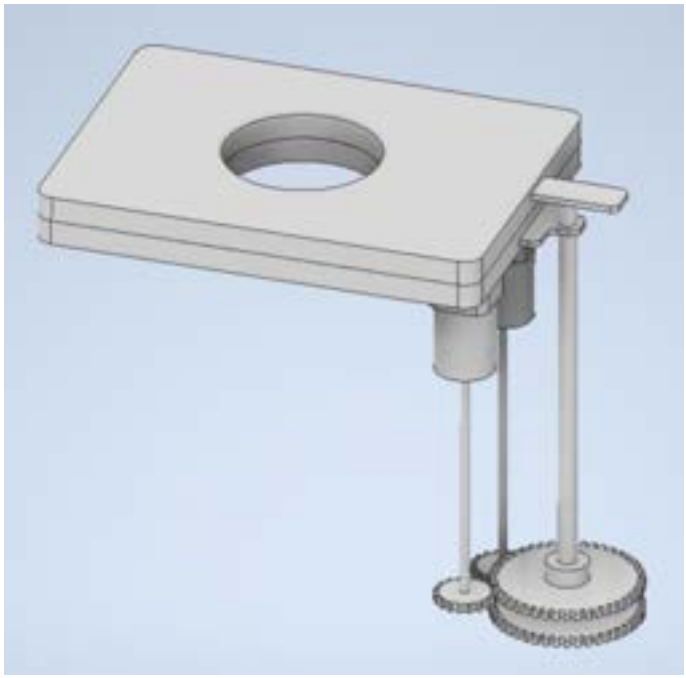

Download

Screenshot_2023-10-09_170412.png (166 kB)

Worm Drive Design

NICHOLAS SYMONS - Oct 12, 2023, 10:46 AM CDT

Title: Worm Drive Design

Date: 10/12/23

Content by: Nick

Present:

Goals: To make a CAD model of the worm drive design and a description for the preliminary report.

Citations:

Content: The worm drive design was originally made by a previous group. We are trying to solve some of the problems of the previous design.

Description:

The worm drive design interfaces with the existing manual control knob in order to move the stage. In this design, the manual knob will have spur gears added so that the worm gears can turn the knob. The worm gears will be placed on top of one another to reduce the amount of space used and will be angled so they can easily mesh with their respective spur gear.

Conclusions/action items: If we were to continue with this design we would need to design a housing unit for the motors along with either a rail system or a way to attach the motors to the underside of the stage.

NICHOLAS SYMONS - Oct 12, 2023, 10:44 AM CDT

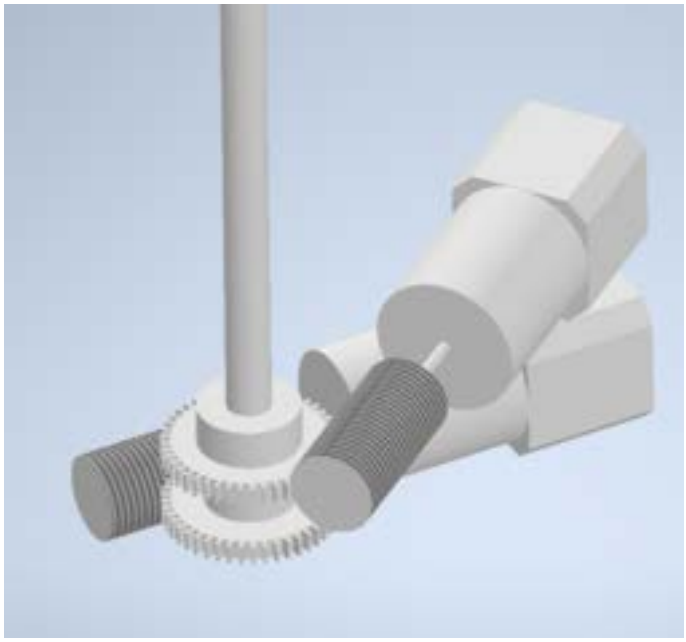

Download

Screenshot_2023-10-05_114608.png (262 kB)

Direct Attachment V1

NICHOLAS SYMONS - Nov 02, 2023, 10:12 AM CDT

Title: Direct Attachment V1

Date: 11/2/23

Content by: Nick Symons

Present:

Goals: To create a way to directly attach a stepper motor to the x-knob of the microscope.

Citations:

Content: After getting the dimensions of the knob from Tyler, I made a quick 3D model of a piece that should allow us to directly attach the motor to the x-knob of the microscope. After it's done printing, we'll have to make sure it has the right amount of tolerance to fit on the knob and then find a way to add screw holes that will let it attach to the knob.

I've attached the Inventor file of the first version of the piece below.

Conclusions/action items: We need to test whether the piece actually fits on the microscope knob and then add screw holes to the piece.

NICHOLAS SYMONS - Nov 02, 2023, 10:12 AM CDT

Download

Direct_Attachment_V1.ipt (374 kB)

Final Report

TYLER HAUPERT - Sep 15, 2023, 5:46 PM CDT

Download

Microscope_Low-Cost_Motorized_Stage_Final_Report.pdf (3.68 MB)

Final Notebook

TYLER HAUPERT - Sep 15, 2023, 5:46 PM CDT

Table of Contents

Download

Final_Notebook.pdf (17.3 MB)

Final Poster Presentation

TYLER HAUPERT - Sep 15, 2023, 5:47 PM CDT

Download

BME_Project_Poster_Microscope_Low_Cost_Motorized_Stage.pptx-2.pdf (1.39 MB)

Preliminary Report

TYLER HAUPERT - Sep 15, 2023, 5:47 PM CDT

Download

Preliminary_Report_-_Motorized_Stage.pdf (1.22 MB)

Preliminary Presentation

TYLER HAUPERT - Sep 15, 2023, 5:47 PM CDT

Download

Low-cost_Motorized_Stage_Preliminary_Presentation.pptx.pdf (1.85 MB)

PDS

TYLER HAUPERT - Sep 15, 2023, 5:48 PM CDT

Download

Preliminary_PDS_-_Microscope_Stage.pdf (110 kB)

Final Report

TYLER HAUPERT - Sep 15, 2023, 5:51 PM CDT

Microscope Low-Cost Motorized Stage

Biomedical Engineering 301: Biomedical Engineering Design

Date: May 3rd, 2022

Client: Dr. John Puccinelli, PhD, Department of Biomedical Engineering, UW-Madison

Adviser: Dr. Colleen Witzenburg, PhD, Department of Biomedical Engineering, UW-Madison

Team Members: Mark Nemecek - Team Leader, Nate Burkard - Communicator, Corey Strahlmeier - BWIG and BSAC, Siddharth Kulkarni - BPAG

Download

Spring_2022_Final_Report.pdf (3.46 MB)

Final Notebook

TYLER HAUPERT - Sep 15, 2023, 5:53 PM CDT

Download

2022_05_04_notebook_62463.pdf (30.4 MB)

Final Poster Presentation

TYLER HAUPERT - Sep 15, 2023, 5:52 PM CDT

Download

Low_Cost_Microscope_Stage-Final_Poster.pdf (1.97 MB)

Executive Summary

TYLER HAUPERT - Sep 15, 2023, 5:53 PM CDT

Download

Executive_Summary_Final_Draft.pdf (59.1 kB)

Preliminary Report

TYLER HAUPERT - Sep 15, 2023, 5:52 PM CDT

Microscope Low-Cost Motorized Stage

Biomedical Engineering 301: Biomedical Engineering Design

Date: March 2nd, 2022

Client: Dr. John Puccinelli, PhD, Department of Biomedical Engineering, UW-Madison

Adviser: Dr. Colleen Witzenburg, PhD, Department of Biomedical Engineering, UW-Madison

Team Members: Mark Nemeth - Team Leader, Nate Burkard - Communicator, Corey Strahlmeier - BWIG and BSAC, Siddharth Kulkarni - BPAG

Download

Low_Cost_Microscope_Stage-Preliminary_Report.pdf (1.07 MB)

Preliminary Presentation

TYLER HAUPERT - Sep 15, 2023, 5:52 PM CDT

Download

301_Preliminary_Presentation.pdf (2.55 MB)

PDS

TYLER HAUPERT - Sep 15, 2023, 5:52 PM CDT

Download

Product_Design_Specifications.pdf (198 kB)

Final Report

TYLER HAUPERT - Sep 15, 2023, 5:56 PM CDT

UW BME Design

Microscope Low-Cost Motorized Stage

Biomedical Engineering 200/300: Biomedical Engineering Design

Date: December 15, 2021

Client: Dr. John Puccinelli, PhD, Department of Biomedical Engineering, UW-Madison

Advisor: Dr. Melissa Skala, PhD, Department of Biomedical Engineering, UW-Madison

Team Members: Mark Nemecek - Team Leader, Nate Barkard - Communicator, Corey Steinhauser - BWIG, Alex Nadolski - BWIG, Caitriana Tenney - BSAC, Charlie Fisher - BPAG

Download

Low_Cost_Motorized_Stage-Final_Report.pdf (3.7 MB)

Final Notebook

TYLER HAUPERT - Sep 15, 2023, 5:57 PM CDT

Table of Contents

Download

Low_Cost_Motorized_Stage-Final_Notebook_pdf.pdf (17.3 MB)

Final Poster Presentation

TYLER HAUPERT - Sep 15, 2023, 5:57 PM CDT

Download

Low-Cost_Motorized_Microscope_Stage_Poster.pptx.pdf (2.3 MB)

Preliminary Report

TYLER HAUPERT - Sep 15, 2023, 5:57 PM CDT

Download

team_Low_Cost_Motorized_Stage_Preliminary_Report.pdf (1.31 MB)

Preliminary Presentation

TYLER HAUPERT - Sep 15, 2023, 5:58 PM CDT

Download

Preliminary_Presentation.pdf (1.83 MB)

PDS

TYLER HAUPERT - Sep 15, 2023, 5:58 PM CDT

Download

Product_Design_Specifications.pdf (114 kB)

Final Report

TYLER HAUPERT - Sep 15, 2023, 6:05 PM CDT

Low-cost Motorized

Microscope Stage

Download

MicroMotor-Final_Report-Fall2020.pdf (955 kB)

Final Notebook

TYLER HAUPERT - Sep 15, 2023, 6:04 PM CDT

Download

MicroMotor-Final_Notebook.pdf (4.74 MB)

Final Poster Presentation

TYLER HAUPERT - Sep 15, 2023, 6:03 PM CDT

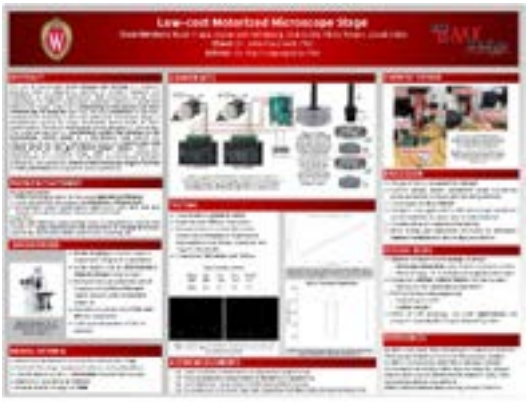

Download

final_poster.pdf (610 kB)

Executive Summary

TYLER HAUPERT - Sep 15, 2023, 6:05 PM CDT

Download

402_Excellence_22_MicroMotor_Executive_Summary.pdf (47.8 kB)

Final Report

TYLER HAUPERT - Sep 15, 2023, 6:08 PM CDT

Low-cost Motorized

Microscope Stage

Download

MicroMotor-Final_Report-Fall2020.pdf (955 kB)

Final Poster Presentation

TYLER HAUPERT - Sep 15, 2023, 6:08 PM CDT

Download

Motor_Stage_Poster.pdf (1.97 MB)

Preliminary Presentation

TYLER HAUPERT - Sep 15, 2023, 6:09 PM CDT

Download

fall_2020_bme_design_preliminary_presentation_-_Read-Only.pdf (4.12 MB)

9/15/2023 - "Step-by-step guide to building an inexpensive 3D printed motorized positioning stage for automated high-content screening microscopy"

TYLER HAUPERT - Sep 15, 2023, 6:18 PM CDT

Title: "Step-by-step guide to building an inexpensive 3D printed motorized positioning stage for automated high-content screening microscopy"

Date: 9/15/2023

Content by: Tyler

Goals: Better understanding market competition

Content:

- This is an open-source low-cost inverted fluorescence microscope with motorized, automated capabilities. It seems to cover many of the client's requirements and is quite an impressive feat. While similar to the OpenFlexture project in that it has all CAD and software files included in the appendix, this design seems to fit the constraints of our situation even better because this design is focused on inverted fluoroscopy, which is the same as the microscopes of interest to our client. This discovery does not necessarily make our project obsolete, and it should be discussed with the client where this design may fall short of his needs so that we can make modifications to our own prototypes.

Conclusions/action items:

This seems like a viable solution to the project the client has proposed. I hope to bring it up at the client meeting to answer a couple of questions. These questions include:

- In what ways could this (very comprehensive) design fall short?

- Are you searching for a general solution to this problem or one specific to your situation and problem?

- With this discovery, is our project still going to proceed?

TYLER HAUPERT - Sep 15, 2023, 2:51 PM CDT

Download

Step-by-step_guide_to_building_an_inexpensive_3D_printed_motorized_positioning_stage_for_automated_high-content_screening_microscopy.pdf (1.07 MB)

9/15/2023 - The OpenFlexture Project

TYLER HAUPERT - Sep 15, 2023, 5:28 PM CDT

Title: The OpenFlexture Project

Date: 9/15/2023

Content by: Tyler

Goals: Understand current competition and existing designs including a low-cost motorized microscope stage

Content:

- Link: https://openflexure.org/

- From the website: "The OpenFlexure project makes high precision mechanical positioning available to anyone with a 3D printer - for use in microscopes, micromanipulators, and more."

- The OpenFlexture project is an open-source project that delivers CAD files, software, and instructions that allow everyday people with access to 3-D printers to assemble a high-quality microscope. They also have plans for multiple stage designs on their website that allow people to create a motorized stage that they can attach the the microscope.

- While this project is similar in nature to our project, it is not robust enough to fit the needs of our client. Their stage can only be utilized by their microscope, and will not fit the design of the Nikon and Olympus microscopes we have been tasked with outfitting.

Conclusions/action items:

While the ideas of this project and ours seemingly align, they are slightly different. Many principles of the OpenFlexture microscope and stages can be applied to our project, but novel modifications will have to be designed to achieve the desired end goals established by our client.

9/15/2023 - Nikon Motorized Microscopes

TYLER HAUPERT - Sep 15, 2023, 7:05 PM CDT

Title: Nikon Motorized Microscopes

Date: 9/15/2023

Content by: Tyler

Present: Tyler

Goals: Understand what elements went into Nikon's market-available motorized microscopes. Understand how these same principles could be applied to our project in a more cost-effective manner to achieve a function, affordable outcome.

Content:

- PDF Below

to be completed

Conclusions/action items:

to be completed

TYLER HAUPERT - Sep 15, 2023, 3:00 PM CDT

Download

NIkon_Ti2_Series_Brochure.pdf (8.5 MB)

9/15/2023 - The FlexiScope

TYLER HAUPERT - Sep 15, 2023, 7:05 PM CDT

Title: The FlexiScope

Date: 9/15/2023

Content by: Tyler

Present: Tyler

Goals: Market research and looking into previously used methods of cost reduction in microscope design.

Content:

- PDF Below

- to be completed

Conclusions/action items:

- to be completed

TYLER HAUPERT - Sep 15, 2023, 3:11 PM CDT

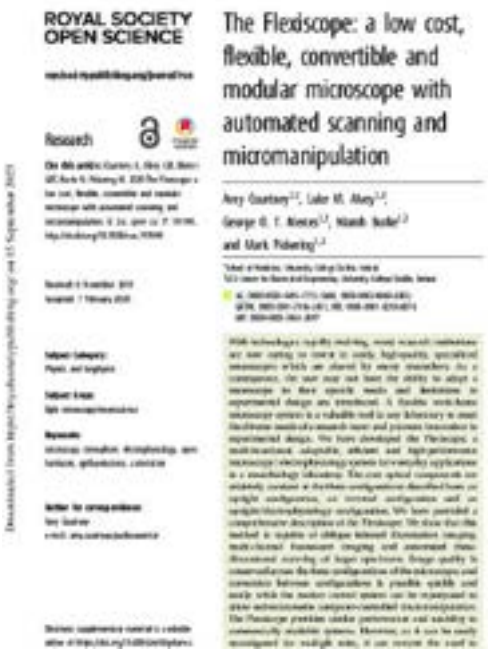
ROYAL SOCIETY OPEN SCIENCE

Research

The Flexiscope: a low cost, flexible, convertible and modular microscope with automated scanning and micromanipulation

Download

rsos.191949.pdf (149 MB)

10/12/2023 - LabArchives Review

Title: LabArchives Review

Date: 10/12/2023

Content by: Tyler

Present: Tyler

Goals: Review previous group notebooks and document the most useful sections

Content:

One of the initial challenges we had when beginning the design process was finding information on all the electronics that the previous teams had purchased. Below is a list of the part names and numbers of the products, for the use of future teams.

Part Name:	Part Number:	Link
Nema 17 Stepper Motor L=39mm Gear Ratio 100:1 High Precision Planetary Gearbox	17HS15-1684S-HG100	https://www.omc-stepperonline.com/nema-17-stepper-motor-l-39mm-gear-ratio-100-1-high-precision-planetary-gearbox-17hs15-1684s-hg100
SBR12-600mm Linear Bearing Rail	SBR12-600mm	https://www.amazon.com/SBR12-600mm-Linear-Bearing-Slide-Dynamic/dp/B07W89JYQ9
Four-way Joystick with Button	n/a	Purchased from Makerspace
Breadboards	n/a	Purchased from Makerspace
Arduino Uno	A000066	https://store-usa.arduino.cc/products/arduino-uno-rev3
Stepper Motor Driver Nema TB6600	TB6600	https://www.dfrobot.com/product-1547.html

Title: Mechanical Fabrication - Gear Ratios and Mathematics

Date: 10/3/2020

Content by: Darshigaa Gurumoorthy

Present: N/A

Goals: Figure out equations for the calculations of gear ratios

Content:

Online Calculator:

https://zalophusdokdo.github.io/StepperMotorsCalculator/en/index.html

$$\text{First Gear Diameter} = \frac{\text{Total Gear Diameter}}{[1 - (\text{Motor Step Angle} / 1\ \mu\text{m Knob Angle})]^2}$$

Second Gear Diameter = Total Gear Diameter - First Gear Diameter

Above formula should provide a step size that allows a1 uM accuracy

Conclusions/action items:

Use above formula to calculate gear ratios.

Conclusions/action items:

9/29/2023 - Spur Gear Math

Title: Spur Gear Math

Date: 9/29/2023

Content by: Tyler

Present: Tyler

Goals: Document equations, units, and other content related to calculations involving spur gears

Content:

Webiste: https://www.engineersedge.com/gear_formula.htm

- This website is a spur gear calculator that can assist in calculations involving spur gears

- Variables are defined as follows

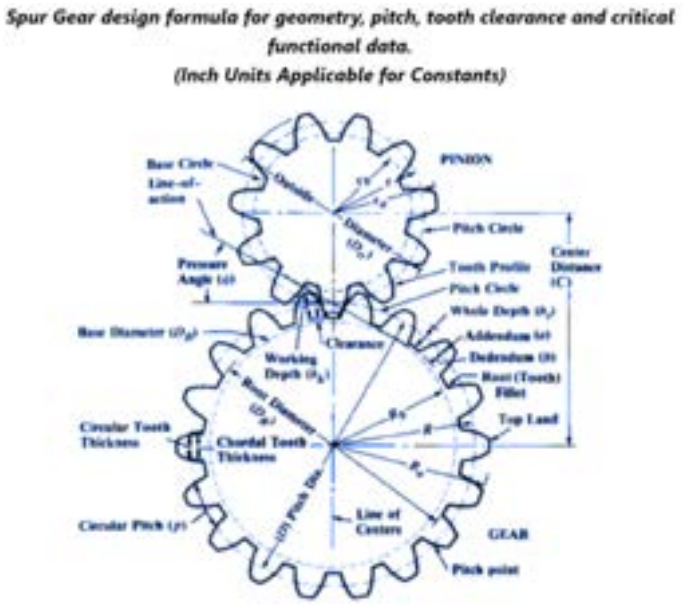

φ = Pressure Angle
a = Addendum
a_G = Addendum of Gear
a_P = Addendum of Pinion
b = Dedendum
c = Clearance
C = Center Distance
D = Pitch Diameter
D_G = Pitch Diameter of Gear
D_P = Pitch Diameter of Pinion
D_B = Base Circle Diameter
D_O = Outside Diameter
DR = Root Diameter
F = Face Width
h_k = Working Depth of Tooth
h_t = Whole Depth of Tooth
m_G = Gear Ratio
N = Number of Teeth
N_G = Number of Teeth in Gear
N_P = Number of Teeth in Pinion
p = Circular Pitch
P=Diametral Pitch

- which can be used to find various values using the equations:

To Find	Equation
Base Circle Pitch	$D_B = D \cos\phi$
Circular Pitch	$p = (\pi D)/ N$ $p = \pi / P$
Center Distance	$C = N_p (m_G + 1) / 2P$ $C = (D_p + D_G) / 2$ $C = (N_G + N_p) / 2P$ $C = (N_G + N_p) p / 2P$ $C = (N_G + N_p) p / 6.2832$
Diametral Pitch	$P = \pi / p$ $P = N / D$ $P = [N_p (m_G + 1)] / 2C$
Gear Ratio	$m_G = N_G / N_p$
Number of Teeth	$N = P D$ $N = (\pi D) / p$
Outside Diameter (Full Depth Teeth)	$D_O = (N + 2) / P$ $D_O = [(N + 2) p] / \pi$
Outside Diameter (American Standard Stub Teeth)	$D_O = (N + 1.6) / P$ $D_O = [(N + 1.6) p] / \pi$
Outside Diameter	$D_O = D + 2a$
Pitch Diameter	$D = N / P$ $D = (N p) / \pi$
Root Diameter	$D_R = D - 2b$
Whole Depth	$a + b$
Working Depth	$a_G + a_P$

Conclusions/action items:

While all of these equations, variables, and identities will undoubtedly be useful when we begin the fabrication of our spur gear design, I do not yet know what the exact application will be. Our gear choice should be based on math and quantifiable metrics. These equations should be referenced heavily during the design phase to ensure optimal gear choice and fabrication. As of now, all gears are planned to be laser cut from a bulk material of our choice.

TYLER HAUPERT - Sep 29, 2023, 9:29 AM CDT

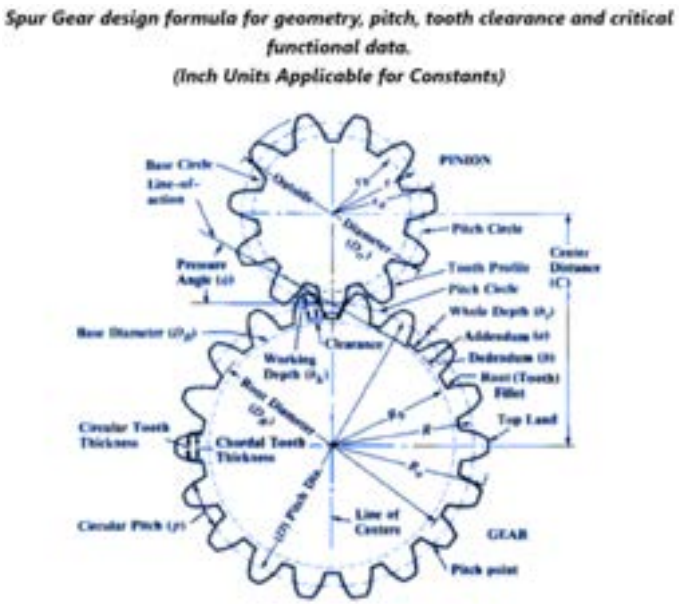

Download

Spur_gear_math.png (533 kB)

TYLER HAUPERT - Sep 29, 2023, 9:38 AM CDT

Where:
φ = Pressure Angle
a = Addendum
a_G = Addendum of Gear
a_P = Addendum of Pinion
b = Dedendum
c = Clearance
C = Center Distance
D = Pitch Diameter
D_G = Pitch Diameter of Gear
D_P = Pitch Diameter of Pinion
D_B = Base Circle Diameter
D_O = Outside Diameter
DR = Root Diameter
F = Face Width
h_k = Working Depth of Tooth
h_t = Whole Depth of Tooth
m_G = Gear Ratio
N = Number of Teeth
N_G = Number of Teeth in Gear
N_P = Number of Teeth in Pinion
p = Circular Pitch
P=Diametral Pitch

Download

spur_gear_variables.png (60.8 kB)

TYLER HAUPERT - Sep 29, 2023, 9:38 AM CDT

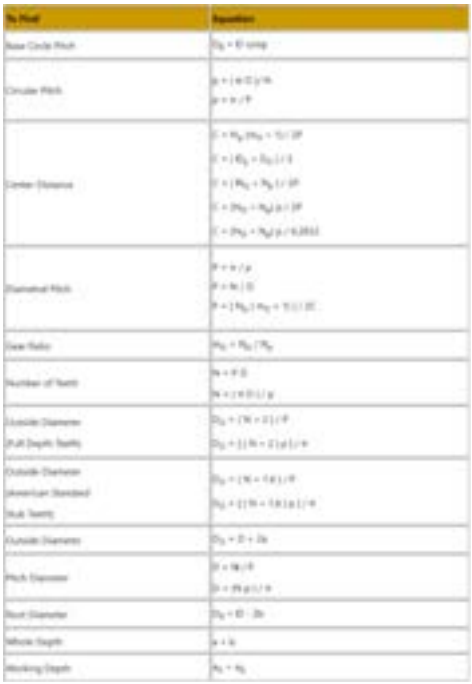

Download

spur_gear_math_2.png (43.1 kB)

10/13/2023 - thoughts

TYLER HAUPERT - Oct 13, 2023, 11:40 PM CDT

Title: Thoughts regarding preliminary report background

Date: 10/13/2023

Content by: Tyler

Goals: Document a few things I was thinking about while writing the background section of the preliminary report

Content:

- past team notebooks are incredibly helpful-I think I am going to try to get better at documenting heavily in mine just for the sake of future groups.

- The more I think about it the more I think a 3-gear design would be better than 2. many of the previous groups used massive gears to reach the range of micron resolution. I feel like the multiplicative nature of a multi-gear design would allow us to do the same with a much more spatially conservative design.

- While reviewing past notebooks I noticed previous teams were very good at collaborating with various bme professors on this project. I should have nick (the communicator) reach back out to some of these professors to help streamline fabrication and get things going faster than if we were going from scratch.

Conclusions/action items:

Talk to nick about sending emails. Document more thoroughly.

9/25/2023 - Tyler Design Ideas

Title: Tyler Design Ideas

Date: 9/25/2023 (gear image added 9/29/2023)

Content by: Tyler

Present: Tyler

Goals: Conceptualize and present design ideas and considerations

Content:

Ideas:

- Moving the stage

  - I observed during the client meeting that the stage could be moved by placing your hand on it and pushing it around. This is not a feature that has been explored by previous groups, but I am curious to know if there is any way of taking advantage of this aspect to generate a novel solution to the problem at hand.

- Worm drive

  - This was the design of the most recent group. I think it would be worth the time of the group to meet with MakerSpace workers to discuss the details of this design to hopefully generate a more functional, compact alternative to it.

- Gears

  -A spur gear design was used by the original group tasked with this project. While it is not the design of the most recent group, I think it is probably the most viable prototype made. There are improvements that need to be made, but I believe this is a very good route to explore.

- The gear design will use stepper motors to power spur gears that will move gears attached to the manual knob. This will look somewhat like the image below, with the central shaft with two gears representing the x and y knobs of the control arm.

- Belt driven

  - a belt or chain-driven design could definitely accomplish what we are seeking to get done, but I have two concerns. First is space. I think this design could end up being spatially cumbersome and end up not meeting client requirements.

Second, I think that for this design to work we would need some way to mount this device to the countertop, which is a problem I don't currently have a solution to.

- Hydraulics

  - not sure how this could work but if there is a way to apply hydraulics to the design I feel like a proof-of-concept design could be produced on a very low-cost budget

Conclusions/action items:

Meet with the team today. Discuss and draw up all ideas to be evaluated in the design matrix.

9/29/2023 - Spur Gear Design Preliminary Drawing

TYLER HAUPERT - Sep 29, 2023, 9:57 AM CDT

Title: Spur Gear Design Preliminary Drawing

Date: 9/29/2023

Content by: Tyler

Present: Tyler

Goals: Draw spur gear design for design matrix

Content:

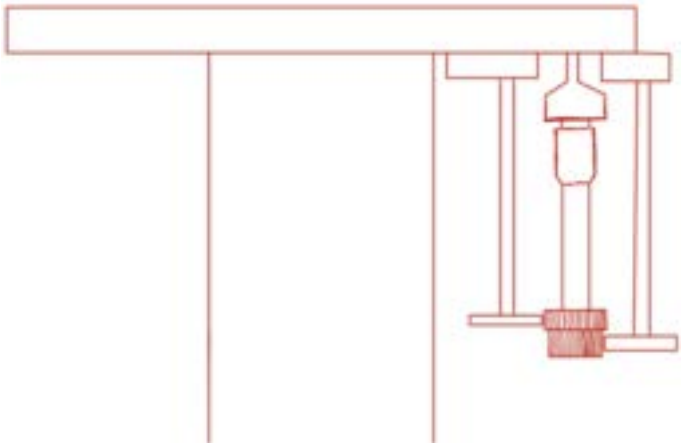

Conclusions/action items:

While this drawing is sufficient for the purposes of the design matrix, I will need to create a CAD file now that we have decided to go forward with this design. Before finalizing this file, I need to get into the team lab to determine: 1) where the screw holes are 2) how large the stepper motors are, and 3) what kind of clearance we have for our design.

TYLER HAUPERT - Sep 29, 2023, 9:54 AM CDT

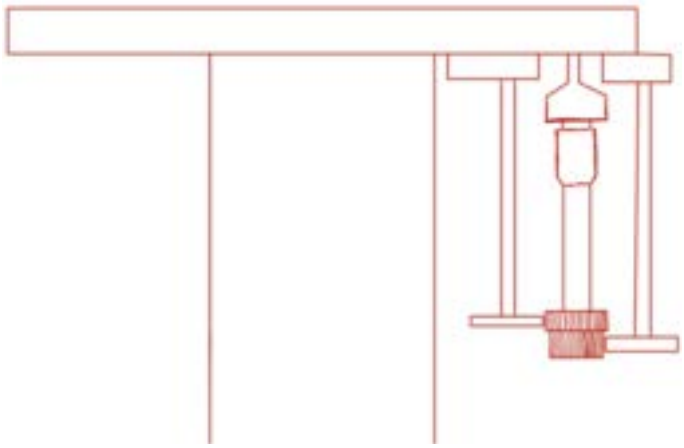

Download

Design_SS.png (153 kB)

12/14/2023 - Sketches relating to final design

TYLER HAUPERT - Dec 14, 2023, 3:52 PM CST

Title: Sketches relating to final design

Date: 12/14/2023

Content by: Tyler

Present: Tyler

Goals: document various sketches

Content:

See pdf. Notes and sketches taken around the time of the first meeting with Dr. Westphal to translate his advice into prototypes capable of being fabricated.

Conclusions/action items:

Not all of this was relevant to the final deign, but a lot of it had an influence on how things turned out. This was a big turning point in the semester.

TYLER HAUPERT - Dec 14, 2023, 3:52 PM CST

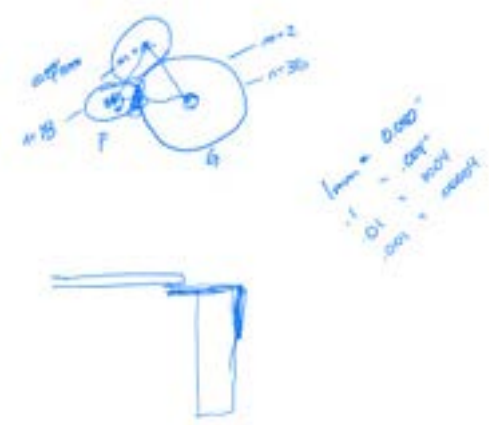

Download

Note_Nov_13_2023_2_.pdf (475 kB)

12/14/2023 - Sketches relating to extra shaft confinement

TYLER HAUPERT - Dec 14, 2023, 3:49 PM CST

Title: Sketches relating to extra shaft confinement

Date: 12/14/2023

Content by: Tyler

Goals: document sketches

Content:

See pdf. rough sketches of my thoughts on how we could add an element to the design to confine the shaft more. This part would have to be installed after assembly.

Conclusions/action items:

These are all good. Another thought is a half moon piece that could swing around and complete the circle around the shaft after the shaft is in the slot to confine the shaft perfectly from all directions.

TYLER HAUPERT - Dec 14, 2023, 3:46 PM CST

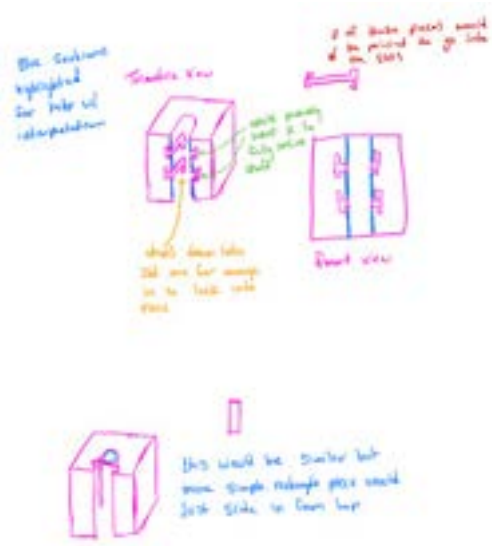

Download

Note_Dec_2_2023.pdf (378 kB)

9/15/2023 - Lab Safety Training Documentation

TYLER HAUPERT - Sep 15, 2023, 2:49 PM CDT

Title: Lab Safety Training Documentation

Date: 9/15/2023

Content by: Tyler

Goals: Document all lab safety training I have received.

Content:

- PDF below

- All training is up to date and accurate. Additional training completed before the end of the semester will be added in additional pages below.

Conclusions/action items:

- I achieved many of the certifications below for reasons other than BME courses, such as lab research and other classes, but they are very relevant to our current project. The microscopes we are working on scan slides containing living cells, and access to the lab under certain testing conditions can/will require various biosafety or chemical safety certifications.

TYLER HAUPERT - Sep 15, 2023, 1:55 PM CDT

Download

Lab_Safety_Training_Documentation.pdf (167 kB)

9/15/2023 - Red Permit Documentation

TYLER HAUPERT - Sep 15, 2023, 2:41 PM CDT

Title: Red Permit Documentation

Date: 9/15/2023

Content by: Tyler

Present: Tyler

Goals: Document Red permit training

Content:

- PDF in attachment below

- completed all necessary quizzes and tasks to achieve red permit certification from the TEAM Lab at UW-Madison.

Conclusions/action items:

This low-level permit gives me select privileges within UW-Madison fabrication spaces. I have access to the Makerspace at Wendt Commons. I can check out tools at the TEAM Lab in ECB. In Addition to these, achieving the Red Permit allowed me to start the process of getting my Green Permit.

TYLER HAUPERT - Sep 15, 2023, 1:53 PM CDT

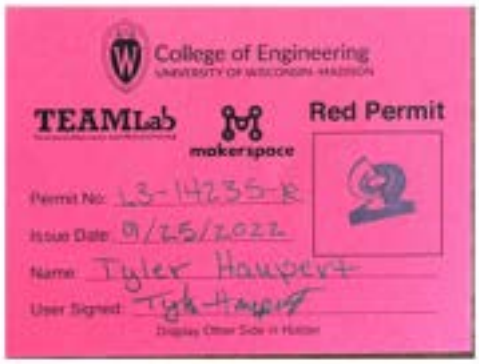

Download

Red_Permit.pdf (568 kB)

9/15/2023 - Green Permit Documentation

TYLER HAUPERT - Sep 15, 2023, 2:43 PM CDT

Title: Green Permit Documentation

Date: 9/15/2023

Content by: Tyler

Present: Tyler

Goals: Document Green permit training

Content:

- PDF in the attachment below

- completed all necessary quizzes and tasks to achieve green permit certification from the TEAM Lab at UW-Madison.

Conclusions/action items:

The green permit is the next permit beyond the red permit and grants holders the ability to rent and operate the lathe and mill machines in the ECB TEAM Lab. These machines are very important for the fabrication of prototypes.

TYLER HAUPERT - Sep 15, 2023, 1:53 PM CDT

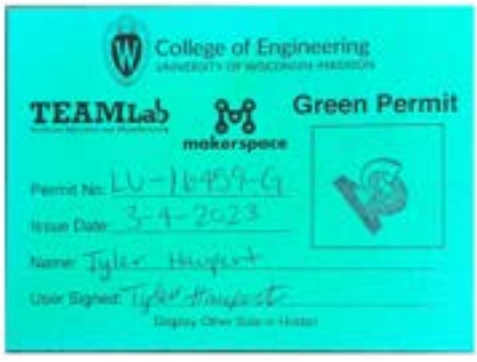

Download

Green_Permit.pdf (586 kB)

9/15/2023 - Progress Report

Title: Progress Report

Date: 9/15/2023

Content by: Tyler, Team

Present: Tyler, Team

Goals: Create and fill out first progress report

Content:

- Document seen below and in Google document attached below the text box. All content was created and completed by me, the team leader, aside from member-specific sections which are clearly noted.

Microscope Low Cost Motorized Stage

Client: Dr. John Puccinelli

Advisor: Dr. Joshua Brockman

Team Members: Tyler Haupert, Julia Salita, Nicholas Symons, Sawyer Bussey, Zhaoyun Tang

Name	Email	Role
Tyler Haupert	thaupert@wisc.edu	Team Leader
Julia Salita	jsalita@wisc.edu	BSAC
Nicholas Symons	nsymons@wisc.edu	Communication
Sawyer Bussey	bussey2@wisc.edu	BWIG
Zhaoyun Tang	ztang259@wisc.edu	BPAG

Reporting Period: September 8th, 2023 - September 14th, 2023

Problem Statement:

The UW-Madison BME teaching lab currently houses two inverted fluorescent microscopes. While these contemporary pieces of equipment are functional in their current state, they leave a great deal to be desired when it comes to laboratory efficiency. Motorized alternatives do exist, however, cost continues to be a factor limiting the exposure students have to this technology. With a working budget of approximately $100, our team seeks to revolutionize the precision and automation of these microscopes through the creation of a novel microscope stage moving device. This design will allow for sequential, automated imaging of coordinate-based locations on slides. The creation of this device will increase the consistency of measurements, reduce the amount of time

spent during data collection, and lower the learning curve for operating this equipment. To remain competitive, design prototypes should be automated in both the X and Y directions and retain high precision and accuracy in translations (1 μm resolution).

Brief Status Update:

On Friday (9/8/2023) all 5 members of the team met and went through introductions. The team met with the advisor and established short term goals to guide group participation. On Monday, the team met independently for the first time to discuss role-specific and team goals. After the meeting, the communicator sent an email to the client with hopes to meet before the advisor meeting (9/15/2023 @ 12:30 pm).

Summary of Weekly Team Member Design Accomplishments:

- Team:
    - The LabArchives were purchased and shared to all members, a team photograph was taken, and team roles were decided. Following the meeting, folders were added to the shared google drive and documents such as the first progress report, the PDS, and meeting notes were created. All members of the team have begun preliminary research into the work of previous groups, market competition, and other resources.
- Tyler Haupert (Team Leader):
    - Reviewed material from previous BME group(s). Investigated current market-available and open-sourced alternatives to our design. Began brainstorming solutions to previous project complications as well as entirely new solutions to the problem at hand. Wrote up a discussion outline prior to the first team meeting to help all members understand their roles and responsibilities. Added questions to the cumulative team document in anticipation of client meeting.
- Julia Salita (BSAC):
    - Reviewed and learned material from past BME teams assigned this project
    - Closely reviewed each model and iteration of past semesters work to have a deeper understanding of the design
    - Created and organized folders in shared design space for current and future documents
    - Created templates for all major assignments and deliverables for future use
    - Created documents to track all pressing questions for the teams advisor and client
- Nick Symons (Communicator):
    - Researched competing designs such as the OpenStage and how they function. Looked at in-depth explanations for how individual components of the OpenStage system works and how Turner Lab made the OpenStage easy enough to build that anyone could replicate it and change the design to fit their needs.
- Sawyer Bussey (BWIG):
    - Researched previous design team’s milestones and accomplishments in order to understand what needs to be improved upon for our design
    - Went to the teaching lab to view the microscope that will be benefiting from our design.
    - Uploaded team photo to the project website as well as progress report
- Zhaoyun Tang (BPAG):
    - Reviewed and Studied designs from previous BME groups assigned to this project.
    - Researched about microscope motorized stage to learn more about the project.
    - Went to the teaching lab to view the final product of past groups.

Activities:

Date	Name	Task	Time (hours)	Weekly Total	Semester Total
9/8-9/13	Team	- team meeting to go over first day activities and establish roles - team meeting to clarify expectations, set client meeting, and begin work on research and PDS - Client meeting	- 1 - 1 - 1	3	3
9/11 9/13	Tyler	• Team meeting • Independent research • Progress report • Team meeting outline and notes • Client questions	- 1 - 1 - 1 - 2 - 0.25	5.25	5.25
9/11	Zhaoyun	• Team meeting • Research • Client questions • Fill out progress report	- 1 - 1 - 0.5 - 0.25	2.75	2.75
9/11 9/13	Nick	• Team meeting • Intro email to Dr. Puccinelli • Research • Progress report	• 1 • .5 • 2 • .25	3.75	3.75
9/11 9/14	Sawyer	-Team meeting -Visited teaching lab to view microscope -upload team photo and progress report -Project Reasearch -Upload progress report	-1 -0.5 0.25 1 0.25	3	3
		•			

Weekly/Ongoing Difficulties:

No current difficulties.

Upcoming Team and Individual Goals

- Tyler Haupert:
  - Continue working on and documenting project research and begin drawing up ideas for brainstorming meetings. Create PDS documents and begin documenting design specifications and requirements. Do more research into competing designs to better understand how their principles could be re-engineered into a more cost-effective alternative.
- Nick Symons:
  - Research information on the microscopes that we'll work with along with existing solutions and previously attempted solutions. Begin documenting all research.
- Sawyer Bussey:
  - Research methods of creating software that will aid the programming of our project
  - Research issues associated with the model of microscope we are working to improve
  - Complete PDS
  - Create questions for the client to improve understanding of the overall project as well as expectations upon completion.
- Zhaoyun Tang:
  - Conduct individual research to understand the project. Start thinking about ideas that can help the team to complete this project. Work with the team to complete the PDS.
- Julia Salita:
  - Complete additional research on the design from past semesters to get a better understanding of the calculations and numerical data collected
  - Complete the PDS according to past design semesters and new and relevant design criteria provided by the client
  - Brainstorm and document new ideas for improvement or redesign of the current set up.

Project Schedule/Timeline:

Project Goal	Deadline	Team Assigned	Progress	Completed
Product Design Specifications	9/22	All	0%	No
Design Matrix	9/29	All	0%	No
Preliminary Presentations	10/6	All	0%	No
Preliminary Deliverables	10/11	All	0%	No
Show and Tell	11/3	All	0%	No
Poster Presentations	12/8	All	0%	No
Final Deliverables	12/13	All	0%	No

Expenses:

- No Purchases as of 9/13

Conclusions/action items:

TYLER HAUPERT - Sep 15, 2023, 5:30 PM CDT

Google Docs
Allow Google Docs access to your necessary cookies
You won't be able to access this content if necessary cookies are turned off
Learn more Allow cookies

Sign in to your Google Account
You must sign in to access this content
Sign in

Can't access your Google Account
We can't sign you in when the necessary cookies are turned off
Learn more
"); la_iframe_1702694423984.contentDocument.close();

9/15/2023 - Problem Statement

TYLER HAUPERT - Sep 15, 2023, 7:15 PM CDT

Title: Problem Statement

Date: 9/11/2023

Content by: Tyler

Present: Tyler

Goals: Create Problem Statement First Draft

Content:

Problem statement:

The UW-Madison BME teaching lab currently houses two inverted fluorescent microscopes. While these contemporary pieces of equipment are functional in their current state, they leave a great deal to be desired when it comes to laboratory efficiency. Motorized alternatives do exist, however, cost continues to be a factor limiting the exposure students have to this technology. With a working budget of approximately $100, our team seeks to revolutionize the precision and automation of these microscopes through the creation of a novel microscope stage moving device. This design will allow for sequential, automated imaging of coordinate-based locations on slides. The creation of this device will increase the consistency of measurements, reduce the amount of time spent during data collection, and lower the learning curve for operating this equipment. To remain competitive, design prototypes should be automated in both the X and Y directions and retain high precision and accuracy in translations (1 μm resolution).

Notes:

- Dr. Puccinelli said it was possibly a bit verbose. Could use editing...

- Dr. Brockman pointed out some language discrepancies and added that the verbiage would be more direct and to the point.

Conclusions/action items:

As expected, this first draft was not perfect. I plan to make revisions in the coming days to have it finalized for the week 2 progress report.

9/15/2023 - Team Meeting 1 Notes

Title: Team Meeting 1 Notes

Date: 9/11/2023

Content by: Tyler

Present: All team members

Goals: Establish roles, responsibilities, and future work that needs to be completed

Content:

- Content available below and in linked google doc. All content created and shared by me (Tyler)

Everyone:

Please familiarize yourselves with the BME Design Page. This page has due dates, meeting times (including role-specific meeting times), and document templates to be used at various points throughout the semester. Many of these templates are also available in the “Templates” section of the shared google drive (Thanks Julia!). Julia and I will also put some relevant work from previous design courses in the “Past Examples” folder. These will be super helpful for understanding how to write in any of our deliverables. I highly recommend basing your style off of them.

By the time you are reading this the progress report should be created and all of the “team” sections should be completed or in progress. I think it would be helpful for everyone to complete their individual sections by the end of the day so Sawyer can throw it up on the webpage and Nick can email it to the client, but these are normally due on Thursdays at 5pm.

Thinking about it now, we might want to wait until after the first client meeting to finalize the problem statement… we can talk about when we want this to be done by during the meeting today

We all should also be starting research right now. This includes, but is not limited to, looking over deliverables from previous groups, independent literature reviews, patent/competing design research, standards research, and review of prior course content that may be applicable to project design.

All research done should be documented in your LabArchives. We have biweekly graded reviews of our labarchives. I’m not sure when the first due date for this is, but we should definitely ask Pucc about it at our first client meeting

Our first deliverable, the Product Design Specifications, is due a week from this Friday. I hope we can have a rough draft of this done next monday by 11:59pm so that we can revise and run over it with the client without the due date looming over our heads.

We need to finalize our problem statement. I will have a first draft by meeting time on the progress report. We should use the limited meeting time we have to discuss and revise this.

Julia created a Questions Doc in the shared drive. If everyone could add a few things to the doc I think that would give us a good base on what we want to address during our first client meeting

This goes hand in hand with research, but start brainstorming ideas independently. These will be super helpful for client meetings and deliverables in the future. CAD files are ideal but I think this project could be difficult to make on solidworks so drawings would be ok for now too.

Meeting Tonight at 5pm, Friday at 12:30 (both at E Hall)

I'm sure I missed things that will need to be addressed, if any of you (especially Julia) notice anything missing feel free to add it to this doc.

Role associated obligations:

Team Leader:

Create, Pay for, and share lab archives

Add previous semester Labarchives PDF(s)

Create and fill out progress report

Create PDS document and complete all necessary formatting

Communicator:

Contact the client (Pucc)

Make first contact, introduce yourself and the team briefly and set up a meeting time (Ideally before thursday)

If the first progress report is done when you are making the email, include it as well

BSAC:

First meeting this Friday @11am

BWIG:

Add team picture to project web page

Submit team roles (follow link on first day activities page)

Upload first progress report to team webpage

BPAG:

Look over BPAG resources on the BME webpage

Make expenses spreadsheet (just copy over the template and put it in a folder in the drive, we won't have expenses for a while)

Attend BPAG meeting on 9/29 @12:05pm

Intended Path: I think this was a first day activity but I can't remember if we did it. Decent chance Pucc will ask about it at the client meeting so just good to know where everyone stands.

Tyler: Biomaterials

Julia: Biomaterials or Biomechanics

Jerry: Biomechanics

Nick: Biomechanics

Sawyer: undecided

Conclusions/action items:

After the meeting, the team established multiple goals. Nick was to contact the client and find a time to meet prior to advisor meetings on 9/15/2023. We also agreed we wanted the PDS to be started by Wednesday (9/13/2023). In addition to this, it was discussed that everyone would continue researching, brainstorming, and documenting their work in the lab notebook.

TYLER HAUPERT - Sep 15, 2023, 6:25 PM CDT

Google Docs
Allow Google Docs access to your necessary cookies
You won't be able to access this content if necessary cookies are turned off
Learn more Allow cookies

Sign in to your Google Account
You must sign in to access this content
Sign in

Can't access your Google Account
We can't sign you in when the necessary cookies are turned off
Learn more
"); la_iframe_1702694424398.contentDocument.close();

TYLER HAUPERT - Sep 15, 2023, 6:25 PM CDT

9/15/2023 - Client Meeting 1 Notes

TYLER HAUPERT - Sep 15, 2023, 7:28 PM CDT

Title: Client Meeting 1 Notes

Date: 9/15/2023

Content by: Team

Present: Team

Goals: Meet with client and document all conversations for future reference.

Content:

- Document Below

- Questions were generated as a group following the 9/11/2023 team meeting

- all red answers were recorded by me (Tyler) during the scheduled meeting time.

Conclusions/action items:

See meeting conclusions in google doc below.

TYLER HAUPERT - Sep 15, 2023, 6:44 PM CDT

Google Docs
Allow Google Docs access to your necessary cookies
You won't be able to access this content if necessary cookies are turned off
Learn more Allow cookies

Sign in to your Google Account
You must sign in to access this content
Sign in

Can't access your Google Account
We can't sign you in when the necessary cookies are turned off
Learn more
'); la_iframe_1702694424795.contentDocument.close();

9/15/2023 - Advisor Meeting 2 Notes

TYLER HAUPERT - Sep 15, 2023, 5:07 PM CDT

Title: Advisor Meeting Notes

Date: 9/15/2023

Content by: Tyler

Present: All

Goals: Meet with advisor. Go over the due dates coming up. Get advice on current and future avenues.

Content:

- Google doc of advisor notes linked below. All content done by Tyler.

- We met with Dr. Brockman today (9/15/2023) at 12:30 in room 3024 of Engineering Hall. Productive discussions went over past work (progress report, file naming, and problem statement), current work, and future work (PDS, brainstorming, and upcoming deliverables). Dr. Brockman gave us detailed feedback on how to reduce verbosity and deliver a more direct, honest pitch.

Conclusions/action items:

This project may have answers, but that does not mean we shouldn't find our own. All designs don't fit our needs and our design won't fit all needs. What is most important is achieving the goals of the client while developing and learning as a student under this curriculum. Mosy pressing upcoming due date is the PDS due next week, which we hope to have drafted by Monday.

TYLER HAUPERT - Sep 15, 2023, 4:45 PM CDT

Google Docs
Allow Google Docs access to your necessary cookies
You won't be able to access this content if necessary cookies are turned off
Learn more Allow cookies

Sign in to your Google Account
You must sign in to access this content
Sign in

Can't access your Google Account
We can't sign you in when the necessary cookies are turned off
Learn more
"); la_iframe_1702694425061.contentDocument.close();

9/15/2023 - PDS

Title: PDS

Date: 9/15/2023

Content by: Tyler

Present: Tyler

Goals: Record personal contributions to various sections of the PDS

Content:

The inverted fluorescence microscopes of the UW-Madison BME Teaching Lab are manually controlled microscopes that allow users to observe and collect data on cell and tissue culture. While the technology exists to convert these microscopes into motorized and automated devices, it is very expensive and beyond the budget of the school. The client, Dr. John Puccinelli, has requested the fabrication of a device to serve as a solution to this problem. The components of this device can be categorized into three discrete categories, however, their ability to integrate into one working unit is essential for a positive product outcome. The final working prototype should include mechanical, software, and hardware components to allow for automation of manual inverted fluorescence microscopes. The mechanical portion of this device will interface with the manual adjustment knob (image?) on the right side of the microscope. It will be capable of moving the stage in a coordinate-based fashion in both the X and Y directions. The mechanical structures of this device will be powered by the hardware components involved in the design. Motors, Arduino boards, and other electrical components will work together to deliver power to this design in a precise manner to drive the movement of the stage. Finally, the software components of this project will act as an add on to the existing Nikon elements software to allow the user to direct the actions of the device. This program should have both directing and scanning components. Directing aspects of the design will include a joystick driven control system as well as a system that uses user input coordinates to stage position. The scanning software will be capable of processing images taken at many positions of the slide and combining them into a singular high resolution image. This function must be available under both joystick and coordinate control systems.

- needs to be condensed

The inverted fluorescence microscopes of the UW-Madison BME Teaching Lab are manually controlled microscopes that allow users to observe and collect data on cell and tissue culture. While the technology exists to convert these microscopes into motorized and automated devices, it is very expensive and beyond the budget of the school. The client, Dr. John Puccinelli, has requested the fabrication of a device to serve as a solution to this problem. The final working prototype should include mechanical, software, and hardware components to allow for the automation of manual inverted fluorescence microscopes. The physical structures of this device will interface with the manual adjustment knob (image?) on the right side of the microscope. It will be capable of moving the stage in a coordinate-based fashion in both the X and Y directions. Software elements will be created to direct the movement of the stage. Finally, the client has also requested the development of software to process and stitch input images to add a scanning feature to the microscopes.

a. Competition

i. The OpenFlexture project is an open-sourced, 3-D printable microscope that can be created and constructed for approximately $200, with multiple stages available to add motorized and automated functionality [].

ii. One example of market-available motorized stages is Zaber’s ASR series motorized XY microscope stages [].

1. While these are functional, accurate to within 12 μm, and available, they do not meet client criteria due to cost and the way they interact with the microscope

iii. Detailed in a 2017 article, a group of German-based scientists created an automated, motorized, 3-D printed inverted fluorescence microscope. The article includes all necessary CAD and software files for construction, as well as a step-by-step instruction manual to aid users in building their device [].

i. Labeling

	Signifies that the main plug must be disconnected from the wall outlet prior to maintenance [].
	Indicates that the equipment labeled is suitable for the use of alternating current only [].
	Specifies that the operator's manual should be referenced and used during use of device [].

Conclusions/action items:

TYLER HAUPERT - Sep 22, 2023, 8:39 PM CDT

Google Docs
Allow Google Docs access to your necessary cookies
You won't be able to access this content if necessary cookies are turned off
Learn more Allow cookies
Sign in to your Google Account
You must sign in to access this content
Sign in
Can't access your Google Account
We can't sign you in when the necessary cookies are turned off
Learn more
"); la_iframe_1702694425441.contentDocument.close();

9/17/2023 - Progress Report 2

TYLER HAUPERT - Sep 17, 2023, 8:44 PM CDT

Title: Progress Report 2

Date: 9/17/2023

Content by: Tyler

Present: Tyler

Goals: Create progress report 2

Content:

- Document linked below

- Created progress report 2; wrote all team updates and filled in all individual sections

Conclusions/action items:

The most pressing matter I would like to get to having now checked this off my todo list is the PDS. I plan on beginning my personal work on this document tomorrow morning, with hopes to have the final draft done tomorrow before I go to bed. having this document done ahead of time will allow us to run it by both our client and advisor prior to submission, which will undoubtedly be to our benefit.

Google Docs
Allow Google Docs access to your necessary cookies
You won't be able to access this content if necessary cookies are turned off
Learn more Allow cookies

Sign in to your Google Account
You must sign in to access this content
Sign in

Can't access your Google Account
We can't sign you in when the necessary cookies are turned off
Learn more
"); la_iframe_1702694425962.contentDocument.close();

9/25/2023 - Team Meeting Notes 3

Title: Team Meeting 3 Notes

Date: 9/27/2023

Content by: Tyler Haupert

Present: Jerry, Tyler, Nick, Sawyer

Goals: Document details of meeting

Content:

-
    - Stage can be moved manually by pushing the stage with your hand.
        - What if we put a suction cup on the corner of the stage and moved the stage by interacting with the suction cup
            - More for proof of concept, would obviously screw in on any sort of final design
        - How could we potentially use hydraulics to push the stage-again going based on this idea of pushing the stage around rather than using the manual knob.
    - What are the previous designs/design considerations?
        - Worm drive gear system
        - Chain and sprocket
        - Meshed spur gear design
        - Replaceable stage (can't do this now)
        - Attachable gearbox
    - Designs to be developed
        - Spur gear
        - Worm drive
        - Linear rails (spur gear)
        - Linear rails (worm drive)
    - Summary:

This meeting was primarily brainstorming-oriented. Each member of the team presented novel and continuation-based ideas, and together we made decisions on which ideas required more development to be evaluated as a candidate in the design matrix. After talking and reviewing materials, the team decided our designs would drive the movement of the stage in one of two methods. The first method, the same as the method of the previous group, involves attaching gears to the manual adjustment knobs and using motors to interact with these gears and move the stage. The second idea, conceived by Nick, involved the use of rails (that we would attach to the stage) that are driven by either spur gears or a worm drive motor to physically propel the stage in a precise manner. This idea is based on the fact that when we went to the client meeting, we saw that the stage could be moved by placing our hand down and pushing it to where we wanted it. Thus, we feel this method of movement could take advantage of this feature and offer a new way of moving the stage.

After completing rough sketches on the whiteboard and making sure the team was all on the same page, each of the four members in attendance each committed to doing research on and completing drawings for one of the four designs.

- Tyler - Spur gear
- Sawyer - Worm drive
- Nick - Linear rails (spur gear)
- Jerry - Linear rails (worm drive)

    - Julia was out of attendance due to a religious observation, but has committed to making up for lost time by contributing to future team documents and deliverables.

Conclusions/action items:

This was a very productive meeting, but there is still a lot to get done today. The team needs to draw up all of the decided-upon designs, evaluate them based on the decided-upon criteria, and write explanations and justifications for each of the criteria and assigned scores. Additionally, the progress report needs to be filled out before nick sends it out on thursday.

9/27/2023 - Design Matrix

TYLER HAUPERT - Sep 29, 2023, 10:00 AM CDT

Title: Design Matrix

Date: 9/29/2023

Content by: This entry includes my individual contributions, however, this document was a team effort

Present: All team members

Goals: Evaluate all proposed designs generated by the team

Content:

Performance: The performance criteria of the Motorized Microscope design matrix is representative of the proposed design's ability to modulate the position of the stage in a consistent, precise, efficient manner. Factors considered in this evaluation are outlined in the ___ sections of the Product Design Specifications.

Conclusions/action items:

This is all I have done individually so far, but I plan on making more additions to the document very soon. Additionally, I have not included sections of this document that I contributed to during the last team meeting because those areas were a team effort and not exclusive to me.

Preliminary Presentation

TYLER HAUPERT - Oct 13, 2023, 11:31 PM CDT

Title: Tyler

Date:

Content by:

Present:

Goals:

Citations:

Content:

Conclusions/action items:

TYLER HAUPERT - Oct 13, 2023, 11:30 PM CDT

Download

Motorized_Microscope-Preliminary_Presentation-9_29_2023_1_.pdf (1.02 MB)

10/9/2023 - Team Meeting 5

TYLER HAUPERT - Oct 12, 2023, 2:09 PM CDT

TYLER HAUPERT - Oct 12, 2023, 2:10 PM CDT

Title: Team Meeting 5

Date: 10/9/2023

Content by: Tyler

Present: Team

Goals: establish weekly goals as a team and work on preliminary report

Content:

TODO:

Tyler

- Abstract
- Background
- Conclusion
- Testing methods? If nick needs help

Julia Salita

- discussion

Nick

- Fabrication methods
- Testing methods
    - Tyler can help if time permits

Sawyer Bussey

- materials

Zhaoyun Tang

- Introduction
- Design criteria
- Design evaluations

Conclusions/action items:

Following the meeting we took a trip over to the now open ecb to get our hand on the previous designs. The locker was unlocked and we were able to look at designs and check out the microscopes again. In the future we would like to get digital calipers to make measurements on the microscope to make our cad files to scale.

Google Docs
Allow Google Docs access to your necessary cookies
You won't be able to access this content if necessary cookies are turned off
Learn moreAllow cookies

Sign in to your Google Account
You must sign in to access this content
Sign in

Can't access your Google Account
We can't sign you in when the necessary cookies are turned off
Learn more
"); la_iframe_1702694426693.contentDocument.close();

10/13/2023 - Preliminary Report

Title: Tyler Haupert

Date: 10/13/2023

Content by: Tyler

Present: Team

Goals: Document personal contributions to preliminary report

Content:

Abstract:

Inverted fluorescence microscopes are a highly utilized piece of laboratory equipment used in life sciences research. Manually controlled versions of these microscopes are much cheaper than the market-available motorized alternatives, but are not as ideal for teaching and high-throughput research scenarios. The client, Dr. Puccinelli, has tasked the team to create a device capable of adding motorization, automation, and image sequencing capabilities to these microscopes. An account with funds to the amount of $100 has been created through the UW-Madison MakerSpace to aid in the fabrication of a final design. The created device will be generated through fabrication methods centered mainly around 3D printing and laser cutting. This prototype will control the movements of the microscopes stage by manipulating the hanging manual control knobs. This semester's team hopes to improve upon previous designs by redesigning the gearing configuration and changing the mounting methods of the prototype. Current proposed testing methods are aimed towards assessing the accuracy of the movements of the stage and the potential impact of the design's weight on the focus of the microscope. Data analysis of quantifiable success metrics will allow for a precise assessment of success as defined by the PDS-outline requirements of this design. The team is currently in the fabrication phase of the design process, with hopes to have the first iteration of the prototype completed in time for BME show and tell on November 3rd.

2. Background

2.1: Background Research

The BME Teaching Lab at UW-Madison houses, amongst many other pieces of equipment, two inverted fluorescence microscopes-one of which can be seen in *figure 2*. The "inverted" in the name is due to the flipped arrangement of certain parts of the microscope relative to what is normally seen. These microscopes house an objective lens above the stage, with a condenser and light source located below the stage [4]. In addition to an altered arrangement of componentry, inverted fluorescence microscopes also have a unique imaging mechanism that utilizes fluorescent dyes. Dyes are placed within the sample by researchers and excited through the use of a halogen lamp. Differences between input and output emission are used to generate high resolution imagery of things like living cells and tissue culture [5].

Figure 2: Nikon TI-U inverted fluorescence microscope used in the BME Teaching Lab [6].

The advantageous imaging capabilities of these microscopes have garnered them a lot of attention within the scientific community. In specific, these microscopes have very popular applications in the realm of life sciences laboratory research [7].

High throughput has always been the goal, but reaching that goal in a cost effective manner has continued to be an elusive pursuit. Motorization of inverted microscopes, in general, can be achieved through one of two mechanisms. The first, and most obvious, option is buying a microscope designed for motorized microscopy with motorized, rather than manual, stage-driving mechanisms built in. Unfortunately, however, this easy decision incurs heavy financial setbacks, with motorized inverted fluorescence microscopes selling for several thousand to several hundred thousand dollars [8]. The second option involves the modification of a manual inverted fluorescence microscope to add features such as motorization, automation, and/or imaging sequencing software. Many of these options are still very costly [9], but there is more room for thrifty solutions within this category through the use of external motors, 3D printed parts, and other low cost manufacturing methods.

Two groups prior to ours have attempted to motorize the manual inverted fluorescence microscopes by attaching gears to the control knobs and manipulating them through gears powered by stepper motors. Each of these teams had their own flaws, which is to be expected when attempting to take on a task such as this within the time frame of one semester. The hope is to use the basics of their projects in a potentially more robust arrangement to create a superior iteration of this design.

2.2: Design Research

Current areas of the design being targeted for improvement can be aptly categorized into changes concerning the gearing configuration and changes concerning the spatial arrangement of the design. While this categorization can assist in the delegation of fabrication roles within in the team setting, it is worth noting that these two aspects are very much intertwined, with gear sizes, gear locations, and the number of gears all having considerable effects on how the overall design can be spatially arranged to integrate into the existing mechanical structures of the microscope.

The main considerations when assessing the category of gearing configurations is the speed, resolution, and spatial use of the various designs. All previously conceived designs have used a 2-gear system, with a gear attached to a stepper motor driving the movements of a secondary gear that is fixed to the manual control knobs. With the primary endpoint of micron-resolution movements, previous groups were able to calculate gearing dimensions using the equation found in *figure 3* [10]. Keeping compactness in mind, gearing configurations using three, or potentially even more, gears could be fabricated to achieve that same gearing ratio with much smaller gears. Three gear designs contain a driver gear, an idler gear, and a follower gear. In this system, the driver-idler and idler-follower gear ratios have a multiplicative effect, which would allow the design to utilize much smaller gears. Although some time would have to be spent perfecting this new gearing system, the space being saved warrants it.

$$\text{First Gear Diameter} = \frac{\text{Total Gear Diameter}}{[1 - (\text{Motor Step Angle} / 1\ \mu\text{m Knob Angle})]^2}$$

Figure 3: Equation from previous design team used to calculate gear dimensions used in a 2-gear system [10].

Now having brought up the topic of the spatial use of our design, a few comments should be made to address why this factor has received so much consideration within the initial stages of our design process. During the first client meeting Dr. Puccinelli made it very clear that, while previous designs did get some things right, their use of the space on the lab counter was suboptimal and due for improvement. The most recent design team made a rail system that the stepper motors were mounted to to allow them to travel with the stage in the Y direction. This system was successful for proof of concept, but cluttered the user spaces around the microscopes and is not super practical real-world applications. Design considerations have involved the use of multi-gear designs to reduce gear dimensions and allow for the motors and gears to be mounted to the right hand underside of the microscope. The structures connected to the microscope will have to not interfere with stage travel or other use-related aspects of the microscope, so cross referencing with the schematics of the microscope will be necessary during generation of CAD files [11].

2.3: Client Information

The client, Dr. John Puccinelli, is the Associate Chair of the Undergraduate Program and Associate Teaching Professor for University of Wisconsin-Madison Department of Biomedical Engineering. He oversees the BME Teaching Lab in ECB 1002 and is responsible for the purchasing and management of all equipment inside. Dr. Puccinelli has tasked our team with the creation of a device to motorize and automate the inverted fluorescence microscopes in the teaching lab to offer a more robust teaching and research experience to biomedical engineering students and staff at UW-Madison.

2.4: Design Specifications

Through collaboration between the client and our team, a Product Design Specifications document was created. This document can be found in its entirety in section 9.1 of the appendix, but will also be touched on here. Our client requested that this device motorize the stage of the microscopes with a maximum fabrication budget of $100. This device must be easily attachable and detachable so it can be used as an accessory, rather than being permanently integrated into the microscope's design. Final prototypes of this semester should be capable of moving the stage of the microscope as directed and be accurate to within a micron (1 μm) of the intended movement input by the user. Inputs from the user should either be directed by a joystick integrated into the circuit or by inputting coordinate-based locations into a user interface (UI) the team would create. The client would be satisfied with inputting these values into the arduino IDE for proof of concept and testing, but would like a more streamlined UI in a final design. This design, at Dr. Puccinelli's request, will interact with the preexisting manual control knob of the microscope. This knob is located very close to many other mechanical structures of the microscope. With this in mind, designs should be compact and modeled in a way such that they won't interfere with functions of the microscope when attached.

7. Conclusion

The team is currently in the fabrication phase of this project. Having made decisions on the current directions of the designs, fabrication may begin. Due to an unexpected loss of access to ECB our team was unable to access the microscopes for an extended period of time. Thus, the team is actively taking measurements of the microscopes to update roughly-created CAD files. Upon finalization, these files will be used to 3D print, laser cut, and test various parts of our prototypes.

Future work for the project includes finalization of fabrication protocols, defining and testing success metrics for our prototypes, and the development of an image sequencing software system. Later phases of this project will attempt to integrate the software and hardware elements of this design once they have both been fabricated and validated independently of each other. All fabrication steps should be capable of being done within the MakerSpace and TEAM lab spaces of UW-Madison. In the coming weeks the team hopes to collaborate with several staff members at UW-Madison to develop a capable first prototype to be presented at show and tell on November 3rd of this year.

Conclusions/action items:

Above are my personal contributions to the team's preliminary report. In addition to these sections I did independently, I also did whole-document editing and created and formatted the entire report. This document was a team effort and could not have been achieved without the help and collaboration of everyone.

TYLER HAUPERT - Oct 13, 2023, 11:25 PM CDT

PRELIMINARY REPORT: MICROSCOPE LOW COST MOTORIZED STAGE

Download

Motorized_Microscope-Preliminary_Report-10_13_2023.pdf (2.74 MB)

10/18/2023 - Team Meeting 7 Notes

Title: Team Meeting 7

Date: 10/18/2023

Content by: Tyler

Present: Tyler, Sawyer, Nick

Goals: Catch Tyler up on prototyping, go over current plans and obstacles

Content:

Measurements:

Between outside diameters of screw holes: .875in

Diameter of screw hole from bottom: .3425

Diameter of screw hole from top: .12

Length of threaded hole section: .343

Length from inner diameter top hole to end of stage along y-axis .965

.845: Length from bottom inside diameter hole to end of stage along y axis

Top hole inner diameter to edge of stage on x-axis: .1415in.

.7325: Total width of both bottom stages

Top width of lower stage: .345

Bottom width of lower stage:.3875

Emails (for nick)

_____

Hello Dr. Numinkar,

My name is Nick and I am the communicator for the BME 200/300 Motorized Microscope Stage project this semester. While looking through prior semesters' notebooks we noticed you had been collaborating with some of the previous teams on hardware and software development for this project. While our goals will be slightly different from these teams, we think your familiarity with the project could be very helpful when looking for some guidance and wisdom. We would like to find a time when a few members of our team could meet with you to go over a few questions we have come up with. We have availability both this week and next week. If you are available this thursday (tomorrow) between __ and __, this Friday from ___ to ___, or next monday sometime ___-___, please let us know. Thank you so much.

Best regards

Whatever you end with

Email 2:

Hello Dr. Puccinelli,

As you saw, we had a team meeting today getting dimensions of the microscopes to update our CAD files. During this meeting, we noticed these screws (pictures attached) that are located in holes identical to the ones we will be using to mount our design to the microscope stage in our design. With your permission, we would like to remove one of these screws to take some measurements to help identify thread size and other dimensions that would be useful during fabrication. Please let us know if you think we could remove this screw and if you would like to be present when we do it.

Best regards,

Whatever you end with

Conclusions/action items:

During today's meeting we got digital calipers and were able to make measurements on the microscope in the teaching lab. We also noticed screws on the microscope that match the dimensions of the ones we will need to use to mount the device to the stage. Following the meeting the team will be reaching out to Dr. P to discuss taking one of these screws out to take measurements on it. Additionally, we decided it would be best to schedule a meeting with Dr. Numinkar to go over project software/hardware requirements and development.

Canvas Links for Lab Training (sophomores):

Complete the following **TWO** training courses required to work in a Biosafety Level I or Level II lab at UW-Madison:

1. Complete the **Biosafety Required Training** course through Canvas self-registration: https://canvas.wisc.edu/enroll/DMWMDH

2. Complete the **Chemical Safety Training: The OSHA Lab Standard** course through Canvas self-registration: https://canvas.wisc.edu/enroll/34RGCL

After you complete & submit the quiz for **BOTH** trainings (or if you have already completed this for your lab position), go to the "Training Record Lookup Tool", enter your name, netID, OR email, navigate to the details and **save a pdf of the results** (page will show course name(s), your name, date and completion date). It takes UP TO 48 HOURS AFTER the training is completed to show up in the lookup tool.

Upload that results page HERE (and save a copy in your Training Documentation folder in your design notebook)!

10/19/2023 - Meeting with Dr. Nimunkar

Title: Team Meeting 7

Date: 10/19/2023

Content by: Tyler

Present: Tyler, Nick

Goals: Talk to Dr. Nimunkar about prior groups work, our goals, and ways to achieve what we have in mind in a reasonable timeframe.

Content:

Questions to ask:

- Is there a better way to connect the drivers to power? The previous group's solution seems dangerous and very temporary.
- Is the power cord from the previous group enough to power the motors? Cord supplies 1 amp but the motors are rated at 1.68 amps each.

Answers:

- Splice, solder and heat wrap the wires for the wall plugin.
- Microstepping and gear reductions both options
- Proof of concept most important for one semester, make things useful for future group
    - Direct connection, ignoring resolution needs, to perfect hardware and software so future groups can focus on later segments of the project
- Meet with ME prof regarding gears and structural parts of the design

After meeting with Nimunkar:

Tyler:

- Measured mounting screw on microscope
    - NOTE: measurements are in inches, but screw is in metric (dumb I know)
    - Screw head: #3 metric hex wrench
    - Length: 0.623 inches
    - Head diameter: 0.279 inches
    - Thread diameter: 0.159 inches
    - Thread size: 4mm x 70
    - Big washer diameter (washer closest to threads): 0.3065 inches
    - Little washer diameter: 0.2595 inches

Nick:

- Went to MakerSpace to investigate using team funds to purchase an adapter to connect wall outlet plugin to the 2 stepper motors that will be used in our design
- Link for adapter on amazon: (insert here nick)
- Still need to talk so fab fellows about purchasing one through the makerspace so we can use team funds

Conclusions/action items:

Logistics

Set up meetings with MechE faculty to discuss design of gear system and structural components. Following that meeting, schedule a meeting with Dr. P to discuss new plans and directions for the semester. Schedule a team meeting for tonight or friday with everyone present to lay out all that needs to get done prior to show and tell and make sure everyone knows what they should be doing to contribute to group success.

Action items

Talk to Fab Fellows about ordering adapters. Make CAD file for piece that will directly connect stepper motor to one of the knobs to show proof of concept for show and tell (no gears in this design). Brainstorm at team meeting how we plan on fabricating show and tell prototype and then assign roles to all team members. Consider making second design matrix for software/hardware components on final report.

12/15/2023 - Final Report

Title: final report

Date: 12/15/2023

Content by: Tyler

Present: Tyler

Goals: Document Final report contributions

Content:

I. **Fabrication/Development Process**

Materials

Overview: All materials necessary for the fabrication of this device have been documented and input into the BPAG Expense Table (Appendix B). For more information on part numbers, manufacturers, costs, and more, please refer to the materials and cost table (Appendix B).

Guide Rail Mounting Plate:

- 12” x 16” Cutting Board
    - Midnight Granite finish
- Epoxy
- Velcro
- Wood Screws

3D Printed Components:

- Black PLA
- Socket cap screws
- Heat-set inserts
- Set screws

Methods

Guide Rail Mounting Plate:

Figure 10: The GMP following the completion of fabrication.

The GMP is fabricated primarily from the aforementioned 12” x 16” cutting board. To begin, 2 inches will be cut off of the long edge of the board. This will leave a 12” x 2” piece and a 12” x 14” piece. After each cut in this process the edges will have to be cleaned up with a deburring tool and either a heat gun or blow torch to ensure mounting steps later in this process achieve a flush fit. After the cut has been cleaned up, the next step is to mount the smaller piece to the cut end of the board to create a lip that sits 2 inches off the ground. First, arrange the pieces as they will be mounted, and pre-drill and countersink holes for the wood screws to mount into. The drill bit used for pre-drilling should be smaller than the thread size of the wood screw that will be mounting the lip to the board. Prior to mounting the lip, mix and apply epoxy to all surfaces that will be mating. After this is all accomplished, the wood screws can be driven in. The extra epoxy can be cleaned up with a razor blade or by simply wiping it off with a glove on. This preliminary GMP now needs to be set for a day to allow the epoxy to cure. The GMP now needs to be correctly dimensioned to fit flush up to the microscope for mounting. Using TEAM Lab band and table saws, 0.5 inches must be taken off the top of the 2 inch lip, and the overall width of the plate must be reduced to 9 inches. Velcro is then applied to the mounting surface of the lip, which allows the GMP to secure itself to the microscope and resist movements during use. The final fabrication step involves the mounting of the linear rail to the plate. After using a marking pen to line up the microscope knob with the GMP, two wood screws are used to mount the linear rail directly under the path the knobs travel.

3D Printed Components:

Figure 11: The dual stepper mount.

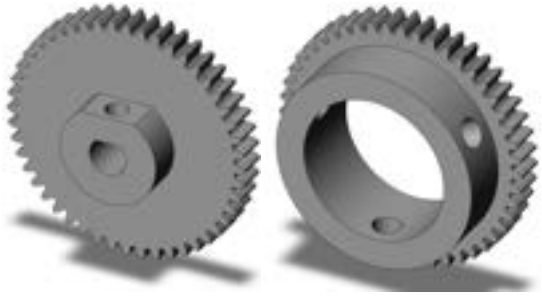

Figure 12: One of the knob gears (left) and one of the stepper gears (right).

Figure 13: The sled mount.

Figure 14: The stiffening cuff.

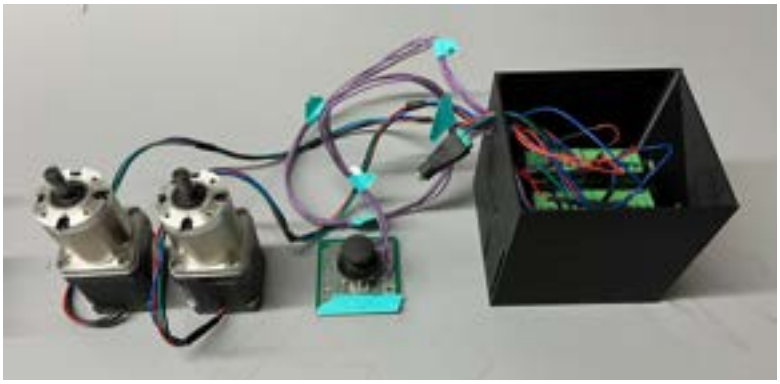

Figure 15: The Electronics Housing Unit and accompanying hardware.

The final, assembled design incorporates the GMP, as well as eight separate 3D printed parts. These parts are: the dual stepper mount (Figure 11), the two stepper gears (Figure 12, left), the two knob gears (Figure 12, right), the sled mount (Figure 13), the stiffening cuff (Figure 14), and the Electronics Housing Unit (Figure 15). With the exception of the stiffening cuff, which was made by a previous team, all of these parts were conceived of, designed, and fabricated by our team. Every part incorporated in the final design was printed on the Bambu Labs X-1 Carbon 3D printers in the UW-Madison MakerSpace using black PLA with 20% infill and supports on. Some parts required additional post-print modifications. CAD files and more detailed fabrication steps regarding each of these parts can be found under Fabrication Protocols and Computer Aided Design (CAD) Files (Appendix C, D).

Final Assembly

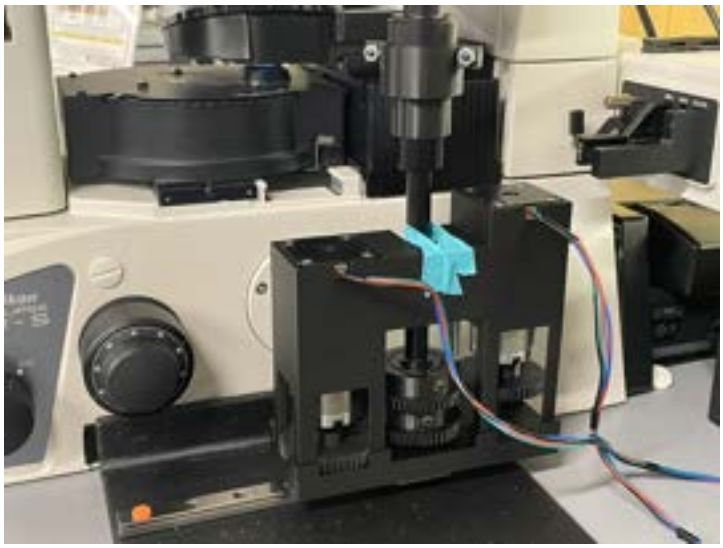

Figure 16: The final design of the Fall 2023 Low Cost Motorized Microscope Stage Project

The culmination of this semester's efforts led to the development of the final prototype (Figure 16). Similar to previous designs (*Design History*), this design manipulates the preexisting manual control knobs that are used to drive stage movements. This prototype utilizes a single linear rail to maintain a stable, consistent connection between the stepper gears and the control knob gears by ensuring that the device's motion is directly correlated with the movement of the control knob shaft. The linear rail system is mounted on the GMP (Guide Rail Mounting Plate), which supports a ball bearing carriage that rides on the rail. This carriage did not meet the mounting requirements of the entirety of the device as there was simply not enough room to mount all of the equipment onto the carriage that was only approximately 50mm long. To overcome this issue, an additional mounting plate that is referred to as the "sled mount" was created with a purpose of increasing the mountable surface area. The sled mount was mounted onto the top of the original carriage of the linear rail system. This allowed for larger 3D models to be created without needing to worry about mounting it to the smaller carriage. The sled mount acted as a support for the stepper motor housing unit that is referred to as the dual stepper mount. This dual mount housed each of the stepper motors in an inverted orientation, meaning that the drive shafts of the stepper motors would be pointed towards the GMP. They were positioned in this way to allow the stepper gears to be spatially arranged in a way such that they are capable of meshing with the gears fixed to the microscope knobs. The dual mount also acted to stabilize the manual control knob shaft in order to reduce inaccuracies imposed by unwanted deflections of the knob shaft.

This device is currently usable through two different modes of user input. The first of these two options revolves around the joystick that has been soldered into the electrical circuit. After uploading the correct code (Appendix E) from the Arduino IDE to the Arduino board, the user can drive the stage by simply moving the knob in the direction they would like the stage to go. While the mechanisms enabling this movement still need some fine tuning, this panning feature is fully functional in nature. Coordinate or Step count based movements, the other mode of interaction with this device, are not quite as functional. The current design is fully capable of moving the stage a set number of steps, however, improvements in the driving mechanisms of this design will need to be made before this changes to a system where the user is able to input coordinates and have the stage center that point under the field of view. Loss of motion and shaft deflection related inaccuracies continue to be the center of motivation for future work, and the following testing protocols were created in order to assess where, specifically, improvements need to be made.

Future Work

This semester's final prototype was accomplished through organized brainstorming, structured evaluation of ideas, and collaborative fabrication efforts. The culmination of these factors led to not only a working prototype, but an established design for future students and groups to build off of. With this in mind, there are specific aspects of this design, as well as unmet design criteria, that need to be addressed in future iterations to create a more functional, lab-ready prototype for the client. To narrow the subject, aside from labeling (Table 2), the improvements needed can be broken down into categories of fine tuning precision and accuracy and integration of automating software.

Table 2: PDS-outlined safety labels needed to comply with ISO and IEC standards (Appendix A).

	Signifies that the main plug must be disconnected from the wall outlet prior to maintenance [10].
	Indicates that the equipment labeled is suitable for the use of alternating current only [11].

While the final created design was functional in nature, there were some limitations of its capabilities that were imparted due to loss-of-motion related issues. To improve the functionality of this device, several improvements have been proposed for future groups to address. First, the heights of the stepper mounts that are integrated into the dual stepper mount need to be very slightly adjusted to make the gears align perfectly vertically. This does not currently affect their ability to mesh, but the team believes that it will improve the design nonetheless. The gears also need to be addressed. As mentioned in Fabrication Protocol (Appendix C), all of the set screws utilize an insert to allow the mounting of the gears through set screws. In the current design, the inserts have proven to be very prone to becoming dislodged or popping out, leading to a loose fit and subsequent loss of motion during operation. The inserts used (Figure 22, left) were the inserts available to the team at the MakerSpace, however, the team believes that a heat-set insert more suited for this application (Figure 22, right) may be a more solid fit and resist popping out of place.

Figure 22*:* Knurled threaded inserts used by our team (left) [12] and proposed alternative heat-set insert option for future teams (right) [13].

Regarding automation, the team has one main goal in mind. Successful integration of software to produce image stitching and sequencing capabilities. As proposed by the client, Dr. John Puccinelli, this would include the use of various free-to-download plugins, such as the Fiji ImageJ Image Stitching Plugin [14]. Ideally, programming done would make these plugins compatible with both the existing Nikon software [15] and the prototype created to motorize the stage. All new steps taken in fabrication will require rigorous testing to prove the levels of competency of the design. Thus, with the successful integration of these plugins, future teams will look to create methods for testing this design through independent brainstorming or by collaborating with BME faculty.

Appendix C: Fabrication Protocols

3D Printed Components:

Steps to 3D print components of the final design:

1. Open part file in SolidWorks
2. Hit “Save As” and select the “.STL” file type option
3. Grab a flash drive from the bins by the MakerSpace 3D printing PCs
4. Load all .STL files you would like to print onto the flash drive
5. With assistance from MakerSpace staff, load all .STL files on to a Bambu Labs plate and prepare using the following settings
    a. Infill: 20%
    b. Resolution: Fine (0.8mm)
        i. Note: not all components need this resolution, but the gears absolutely do.
    c. Supports: Enabled
        i. Support Type: Standard
    d. Filament: Black PLA
6. Once all settings are selected, hit slice, export the .3mf file, and fill out the 3D printing form to have staff start the print
    a. Note: It is advised that as many parts are printed on the Bambu Labs printer at once as possible, due to the flat rate fee of $2 per print when using these printers. The Ulitimakers can be used to print without this flat fee, however, it is worth noting that they are much slower and have much lower resolution than the Bambu Labs printers.

Steps to melt inserts into the stepper and knob gears:

1. Remove the gears from the printer.
2. Using needle nose pliers, X-Acto knives, and tweezers, remove all supports from the 3D prints.
3. Select necessary insert for the application. Using current files, this would mean
    a. Stepper gears: M3 x 6mm x 5mm
    b. Knob Gears: M4 x 6mm x 6mm
4. Turn a soldering iron on.
5. Place the gear in a clamp with the whole you plan on melting the insert into facing up.
6. Using a rubber-coated tweezers, hold the insert up to the tip of the soldering iron and as it heats, gently apply downward pressure with the iron to slowly melt the insert into the hole.
    a. Note: if inserts are filling with plastic, try repeating this process with a screw already in the insert to stop melted plastic from entering the threads.
7. After the plastic has cooled, use the tweezers to clean up the excess on the inside of the print to ensure the knob/shaft will be able to fit flush into the inner hole of the gear.

Steps to mount sled mount to rail carriage:

1. Remove the sled mount from the printer.
2. Using needle nose pliers, X-Acto knives, and tweezers, remove all supports from the 3D prints.
3. Using the provided screws (M3 x 10mm), screw the sled mount into the threaded holes of the carriage.
4. If the print is completed using current files, the holes will be slightly too small for the supplied screws. In this case, the user will need to use a drill to make the holes slightly larger to allow the screw to pass through the sled mount and pin it to the carriage below.

Appendix D: Computer-Aided Design (CAD) Files

Located in this folder is a combination of part, assembly, and STL files created and organized for future groups. All future groups have full permission to download, modify, and reuse these files as they see fit.

Conclusions/action items:

This does not include all the work I did, but rather the sections I was in charge of. Final report is now done. Full document available in pdf below and in team folder above.

Tong Lecture - 11/10/2023

Title: Tong Lecture Fall 2023

Date: 11/10/2023

Content by: Tyler

Goals: Take notes on Tong Lecture

Content:

One Engineer's Journey: Where preparation meets opportunity

Travelle F.F. Ellis, MD, PhD

- Sharing her journey to inspire
  - take from this talk what matters to you and what is relevant to your story
- Young goals of wanting to help people
- Worked in undergrad on left ventricular assist device
  - wanted to get hands on with things
- created a love of research and engineering
- Focus on having fun now, it is part of the journey and your happiness matters
- went from pitt to uw madison MD-PhD program
- Worked on microspheres in BME lab work
  - polymers, degradation
- research taught her how to present complicated science
- now at exact sciences
  - still does many of the same things she did here at madison

Lessons

- Find your people
  - people in your corner, people who are the rocks in your life
    - hers were
      - sorority sisters, MD mentor, pageant queen friend, MechE friend
      - lab/research friends
      - husband
  - helped her to get her first job as MD liaison at Zimmer Biomet
- Do the things that scare you
  - helped in affordable care act stuff in DC
- Laugh until you cry and cry until you laugh
  - dating in grad school, being engaged, etc will not be easy
  - she didn't match for residency
    - failed at her goal
    - had to lean into that, pivot
  - Think about your opportunities
  - now the health equity director at Exact Sciences
    - understanding and implementing cancer care for all
- Practice is important
  - fail when it's ok to fail

<u>You will do this</u>

Conclusions/action items:

Just like the last sentence, you will do this. We are all counting on eachother to achive, and we all can. Focus on the journey, focus on your happiness, and allow your passions to guide your path.

biohazard level 1 -3 entries

JULIA SALITA - Sep 30, 2023, 1:39 AM CDT

Title: Biohazard level 1

Date: 9/29/2023

Content by: julia

Present:

Goals: to understand the restrictions due to the microscopes environment

Citations:

https://www.ncbi.nlm.nih.gov/books/NBK535351/

Content:

1. this article helped me better understand what happens in a BSL-1
    1. they hold minimally hazardous microorganisms

Conclusions/action items:

this was a short article and really just helped sum up that while it is a lab space it does not house anything to that would be considered extremely hazardous.

JULIA SALITA - Sep 30, 2023, 2:07 AM CDT

Title: Biohazard level 1

Date: 9/29/2023

Content by: julia

Present:

Goals: to understand the restrictions due to the microscopes environment

Citations:

https://www.cdc.gov/labs/BMBL.html

Content:

1. From Document (page 56 labeled 28): Biosafety Level 1 (BSL-1) standard practices, safety equipment, and facility specifications are generally appropriate for undergraduate and secondary educational training and teaching laboratories and for other laboratories that work with defined and characterized strains of viable biological agents not known to consistently cause disease in healthy adult humans. Bacillus subtilis, Naegleria gruberi, infectious canine hepatitis virus, and exempt organisms under the NIH Guidelines are examples of the biological agents meeting these criteria. BSL-1 represents a basic level of containment that relies on standard, microbiological best practices and procedures with no special primary or secondary barriers, other than a door, a sink for handwashing, and non-porous work surfaces that are cleanable and easy to decontaminate.
    1. pretty much the material should be non-porous and easy to clean but there seems to be no specific restrictions on any material.

Conclusions/action items:

1. make sure all 3D printed elements are as non-porous as possible
2. once it is time for fabrication make sure that the filament chosen will be able to be smooth and easily cleanable without breaking down

JULIA SALITA - Sep 30, 2023, 2:21 AM CDT

Title: Biohazard level 1

Date: 9/29/2023

Content by: Julia

Present:

Goals: to understand the restrictions due to the microscopes environment

Citations:

FOOD AND DRUG ADMINISTRATION OFFICE OF REGULATORY AFFAIRS ORA Laboratory Manual Volume II: https://www.fda.gov/media/73912/download

Content:

1. Initially thought this would help with cleaning chemicals that can be used in the lab but I never found anything specific
2. The parts of the document I read ended up not being very useful for any new information or what I was looking for

Conclusions/action items:

Keep looking but based on previous findings this does not seem to be the most prevalent thing to focus on

Fabrication

JULIA SALITA - Oct 11, 2023, 7:47 PM CDT

Title: fabrication methods research

Date: 9/29/2023

Content by: Julia

Present:

Goals: to figure out ways to successful complete this project

Citations:

https://www.xometry.com/resources/3d-printing/fdm-vs-fff-3d-printing/

Content:

1. Both Methods:
    1. melt and deposit polymer filament by a heated nozzle to create 3D object.
    2. both the same FDM is trademarked by Stratasys Inc. and FFF is general market term
    3. still slight differences
2. FFF: Fused Filament Fabrication
    1. good for home use
    2. cheaper
    3. for less demanding usage
3. FDM: Fused Deposition Modeling
    1. higher quality, more expensive
    2. better for professional manufacturers expectations
    3. stronger than FFF parts
    4. smoother finish- less layer visibility
    5. machine costs more but gives better results

Conclusions/action items:

still more differences but this is kind of what we need to determine which 3D printing method to use. I would recommend the FDM method. It is still rather inexpensive but gives more accurate and sound objects.

JULIA SALITA - Oct 11, 2023, 7:55 PM CDT

Title: fabrication methods research

Date: 9/29/2023

Content by: Julia

Present:

Goals: to figure out ways to successful complete this project

Citations:

https://making.engr.wisc.edu/3d-printing-the-makerspace/

Content:

1. different from other methods of fabrication:
    1. no mold required
    2. no wait time after it is done printing (no setting misshaps)
    3. no cut outs -less waste material
    4. allows for a more intricate design in all 3 directions not just 2, 1, or no intricate design
2. 3 methods: FDM/FFF, SLA, SLS
    1. compared FDM/FFF in last text
    2. SLA: Stereolithography
        1. uses laser to cure liquid resin to upside-down print tray
    3. SLS: Selective Laser Sintering
        1. uses laser to fuse polymer powder

Conclusions/action items:

FDM/FFF should be sufficient for our project. consult with makerspace once specific design is more defined and constrained.

JULIA SALITA - Oct 11, 2023, 8:01 PM CDT

Title: fabrication methods research

Date: 9/29/2023

Content by: Julia

Present:

Goals: to figure out ways to successful complete this project

Citations:

https://making.engr.wisc.edu/laser-cutters/

Content:

1. goes over requirements to use laser cutters and gives learning modules for those who want to learn.
2. provides equipment specs and software
3. provides equipment specific approved/unapproved materials
4. provides more useful resources and materials to accurately laser cut

Conclusions/action items:

Used this as a way to get the type of laser cutter the makerspace has for us to use.

found it is tech-Labs Universal laser ILS12.150D model

needed to know this to be able to look at approved/unapproved list to pick out acceptable materials for gears - we liked acrylic like past years.

JULIA SALITA - Oct 11, 2023, 8:06 PM CDT

Title: fabrication methods research

Date: 9/29/2023

Content by: Julia

Present:

Goals: to figure out ways to successful complete this project

Citations:

https://making.engr.wisc.edu/electronics/

Content:

1. gives us a bit more of a look at what electronic tools the maker space has
2. gives courses in: intro to electronics and Breadboards + Circuits
    1. look into breadboards + Circuits when it is time to build a circuit
3. list of electronics equipment in the makerspace
4. list of electronics kits
    1. Arduinos
    2. soldering
    3. sensors
5. additional links and useful info
6. also gives list of times staff will be available to answer questions about electronics
    1. good place to problem shoot why circuit is not working
    2.

Conclusions/action items:

gives useful and relevant information on recourses available to help with creating, securing, and implementing circuitry.

open flixure

JULIA SALITA - Oct 11, 2023, 8:11 PM CDT

Title:open flixure

Date: 9/29/2023

Content by: Julia

Present:

Goals: to understand what alternatives are out there

Citations:

https://openflexure.org/

Content:

1. Competing design found by other group member but I did the competing designs slide on the preliminary presentation
2. bullet pts on slide:
    1. Open source
    2. 3D printed microscope and stage
    3. sub-micron (<0.1 µm) mechanical positioning
    4. Approximately $200.
3. Blurb from speaker notes:
    1. The first is the OpenFlexture project which is an open source project. It includes a 3D printed microscope and stage which has an astounding sub-micron mechanical positioning. However, it costs about 200 dollars to make and it requires the creation and use of the microscope the stage is compatible with.

Conclusions/action items:

Make sure to practice speech. read more in-depth (go to their sources) on how to get such accurate and micro results

ASR series

JULIA SALITA - Oct 11, 2023, 8:13 PM CDT

Title: ASR series

Date: 9/29/2023

Content by: Julia

Present:

Goals: To understand different products on the market

Citation:

https://www.zaber.com/products/scanning-microscope-stages/ASR

Content:

1. Competing design found by other group member but I did the competing designs slide on the preliminary presentation
2. bullet pts on slide:
    1. ASR series motorized XY microscope stages by Zaber [2]. - market available
        1. rebuild/replace stage
        2. accurate with in 12 µm
        3. cost between $5,000-$9,000
3. Blurb from speaker notes:
4. The second option is a market available XY motorized stage by Zaber. This model replaces the current stage and is accurate within 12 micrometers. This option is also relatively expensive with a price point between 5,000 and 9,000 dollars.

Conclusions/action items:

practice section. this one is not really anything like what we are looking for. not going to dive more into research for this design.

Open source 3D printed inverted fluorescence microscope motorized stage

JULIA SALITA - Oct 11, 2023, 8:18 PM CDT

Title: Open source 3D printed inverted fluorescence microscope motorized stage

Date: 10/11/2023

Content by: Julia

Present:

Goals: To understand different products on the market

Citation:

Content:

1. Competing design found by other group member but I did the competing designs slide on the preliminary presentation
2. bullet pts on slide:
    1. open source 3D printed inverted fluorescence microscope stage.
        1. Accuracy:
            1. X- (5.1 ± 1.8 µm; −4.9 ± 1.9 µm)
            2. Y- (3.5 ± 2.2 µm; −5.0 ± 1.1 µm)
        2. includes all materials list, instructions, software and CAD files [3].
        3. altered existing stage
3. Blurb from speaker notes:
    - The third is an article that gives step by step instructions on how to build a 3D printed motorized stage for an inverted fluorescence microscope. This design has high accuracy in both the X and Y directions. However there is no price point given and this design alters the existing stage.

Conclusions/action items:

practice section. look at how they got so accurate. also gave very good accuracy data, look into their testing methods to determine accuracy and possibly modify that method in order to get good test results (design permitting).

Notes On Past Semesters

Title: Notes On Past Semesters

Date: 9/10/2023

Content by: Julia Salita

Goals: Understand past work that has been done and recognize the work that still needs to be done.

Content:

Final Design Iterations:

1. Fall of 2020:
    1. 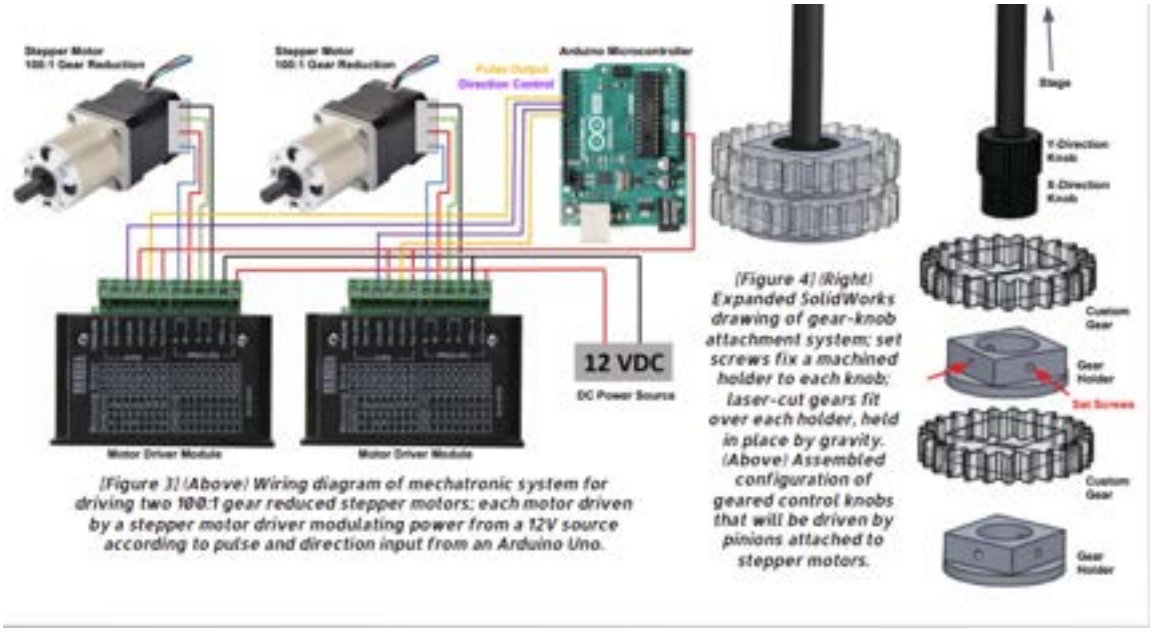

[Figure 3] (Above) Wiring diagram of mechatronic system for driving two 100:1 gear reduced stepper motors; each motor driven by a stepper motor driver modulating power from a 12V source according to pulse and direction input from an Arduino Uno.

[Figure 4] (Right) Expanded SolidWorks drawing of gear-knob attachment system; set screws fix a machined holder to each knob; laser-cut gears fit over each holder, held in place by gravity. (Above) Assembled configuration of geared control knobs that will be driven by pinions attached to stepper motors.
    2. no actual product - covid
    3. device had two gears attached to the knobs that turned them using motors controlled by motor divider module and Arduino microcontroller
    4. no housing for electronics
2. Spring of 2021:
    1. 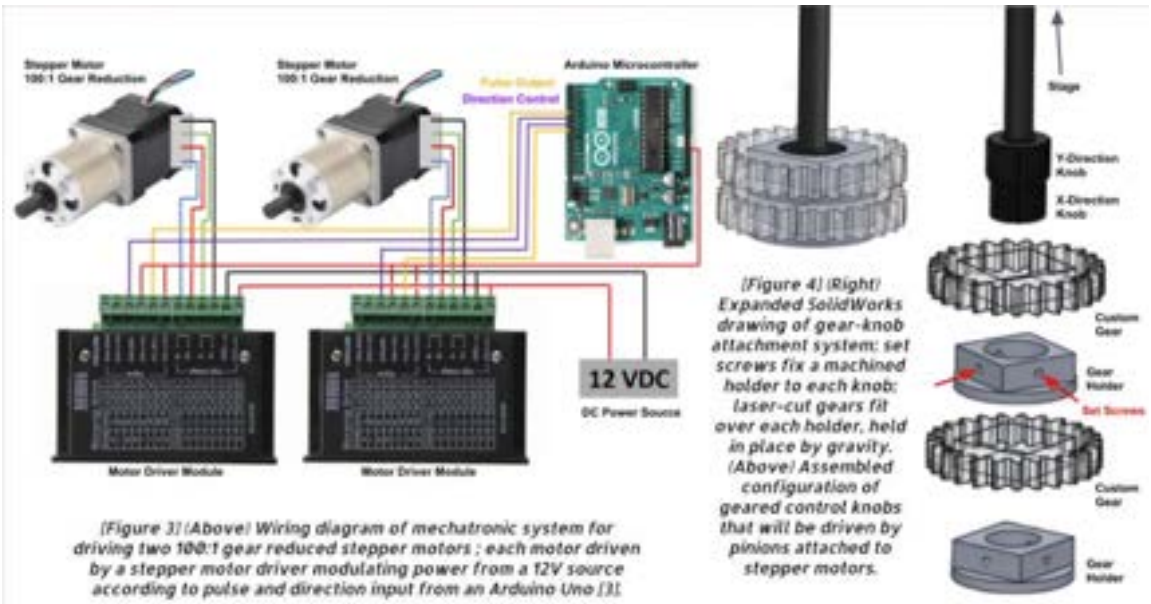

[Figure 3] (Above) Wiring diagram of mechatronic system for driving two 100:1 gear reduced stepper motors ; each motor driven by a stepper motor driver modulating power from a 12V source according to pulse and direction input from an Arduino Uno [3].

[Figure 4] (Right) Expanded SolidWorks drawing of gear-knob attachment system; set screws fix a machined holder to each knob; laser-cut gears fit over each holder, held in place by gravity. (Above) Assembled configuration of geared control knobs that will be driven by pinions attached to stepper motors.

2. 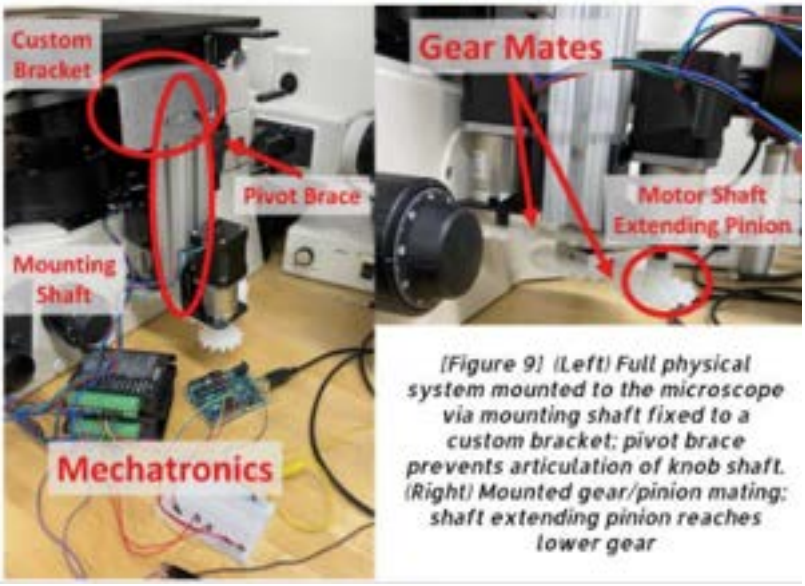

[Figure 9] (Left) Full physical system mounted to the microscope via mounting shaft fixed to a custom bracket; pivot brace prevents articulation of knob shaft. (Right) Mounted gear/pinion mating; shaft extending pinion reaches lower gear
3. device had two gears attached to the knobs that turned them using motors controlled by motor divider module and Arduino microcontroller
4. added custom bracket, pivot brace, and mounting shaft to hold motors near knobs
5. Laser cut gears
6. gear holder that gear is mounted to with screw in place
7. no housing for electronics

3. Fall of 2021:

1.
Figure 1. The Gear-knob attachment. Set screws fixed a machine holder to each of the two manual knobs. Each holder held a laser-cut gear with a diameter:teeth ratio of 88 mm/32 teeth.

Figure 2. The worm drive gear. It attaches to an the adapter for the motor shaft. The worm drive gear turns the laser-cut gears on the control knob.

Figure 3. The adapter between the stepper motor shaft and the worm drive gears.

Figure 4. Two linear rails used to hold the stepper motors while allowing freedom in the y-direction.

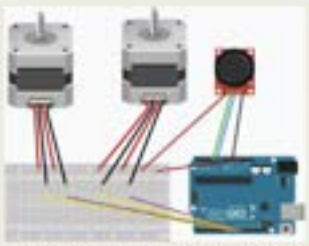
Figure 5. The electrical circuit. Contains an Arduino Uno Rev3 microcontroller, two stepper motors (with drivers not shown), and an Analog 2-axis Thumb Joystick

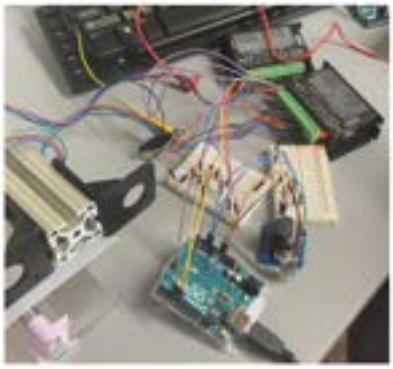

Figure 6. The circuit part of the design. The Arduino connects to the drivers that the stepper motors are hooked up to.

Figure 7. The mechanical part of the design. The stage knob with the gear attachment is shown on the left, with the stepper motors and worm drive gears.

2.
3. held assembly of gears on microscope but changed attachment to motors. used spindle to rotate motors and fixed them perpendicular to gears. also a lot larger and supported by table rather than microscope.
4. Also added joystick handling
5. also allowed for adjustable positioning of motors- could cause problems in maintaining contact and position for optimal use
6. no housing for electronics

4. Spring of 2022:

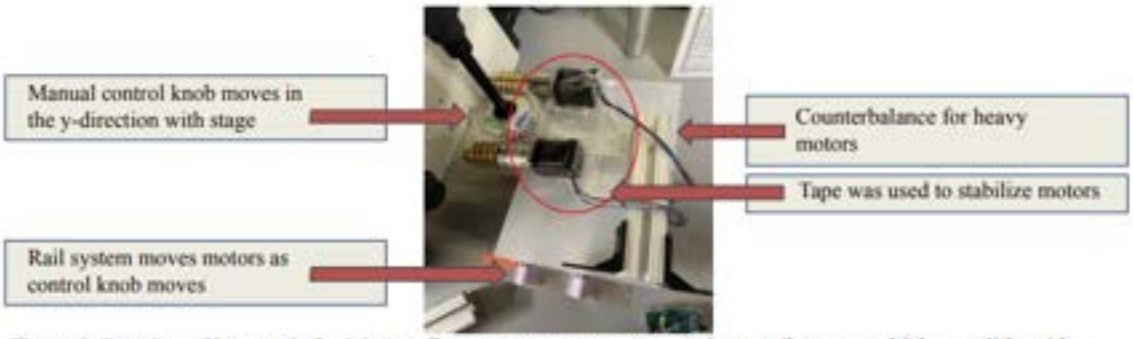

Figure 1. Top view of last year's final design. Stepper motors are connected to a rail system which can slide with the stage in the y-direction. Stepper motors are controlled with an Arduino Uno microcontroller and an Arduino program.The motors are being held down with tape and colored foam is used to give an appropriate amount of separation for the gears.

1.

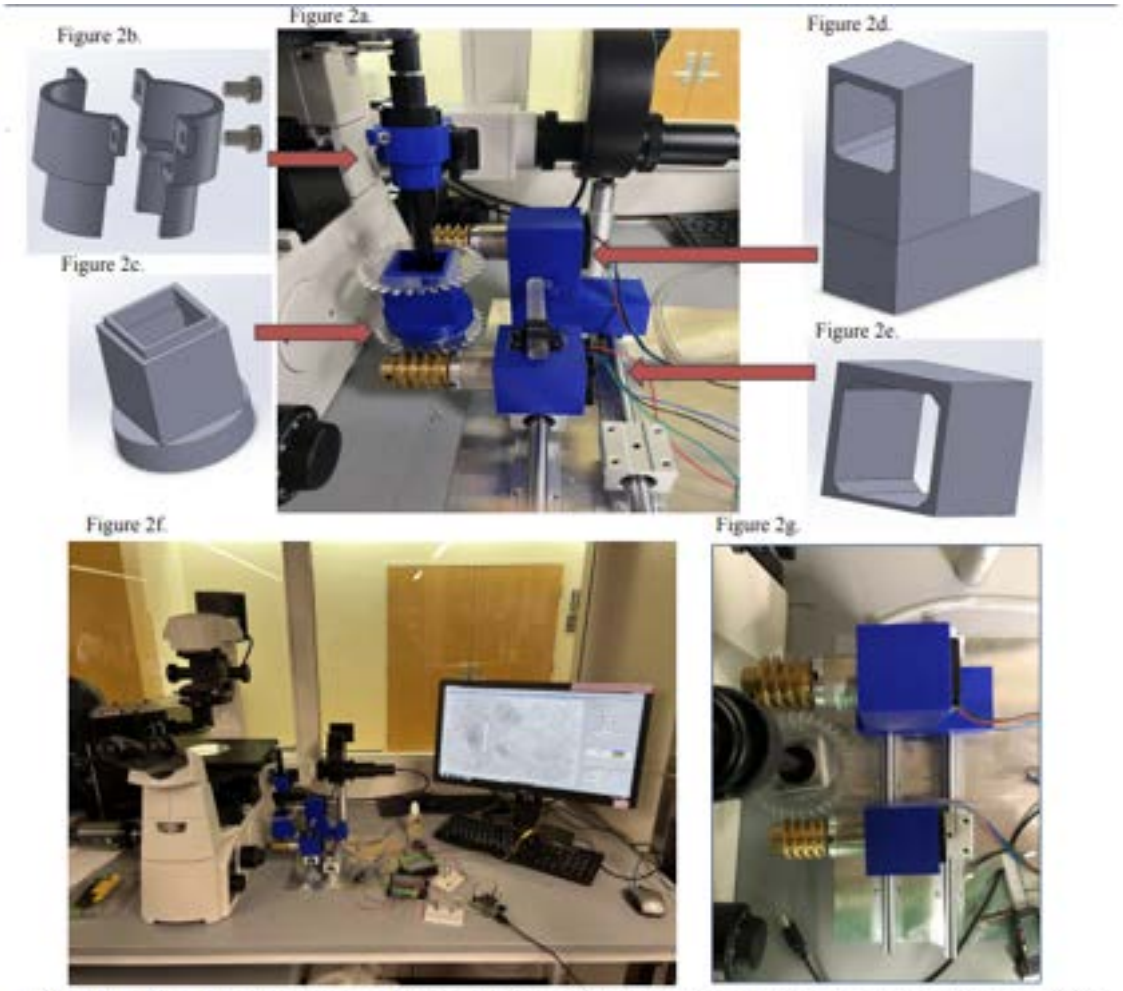

Figure 2. a) Front view of all the gears and the attachments stabilizing the motors and connected to the microscope. Four images showing the SOLIDWORKS designs of all the stabilizers. b) Stabilizer for manual control knob. c) Gear separator to allow each motor to attach to separate gears. d-e) Motor stabilizers. f) Image showing the entire set up with the microscope, attachments, arduino, and projected microscope image all together. g) Image of how the gears are attached to the motors with the stabilizers connected.

2.
3. added casing to stabilize design. added to manual control knob, gear separator to allow for separate attachment, and motor stabilizers
4. still on table and still relatively large
5. no housing for electronics

5. Fall of 2022:

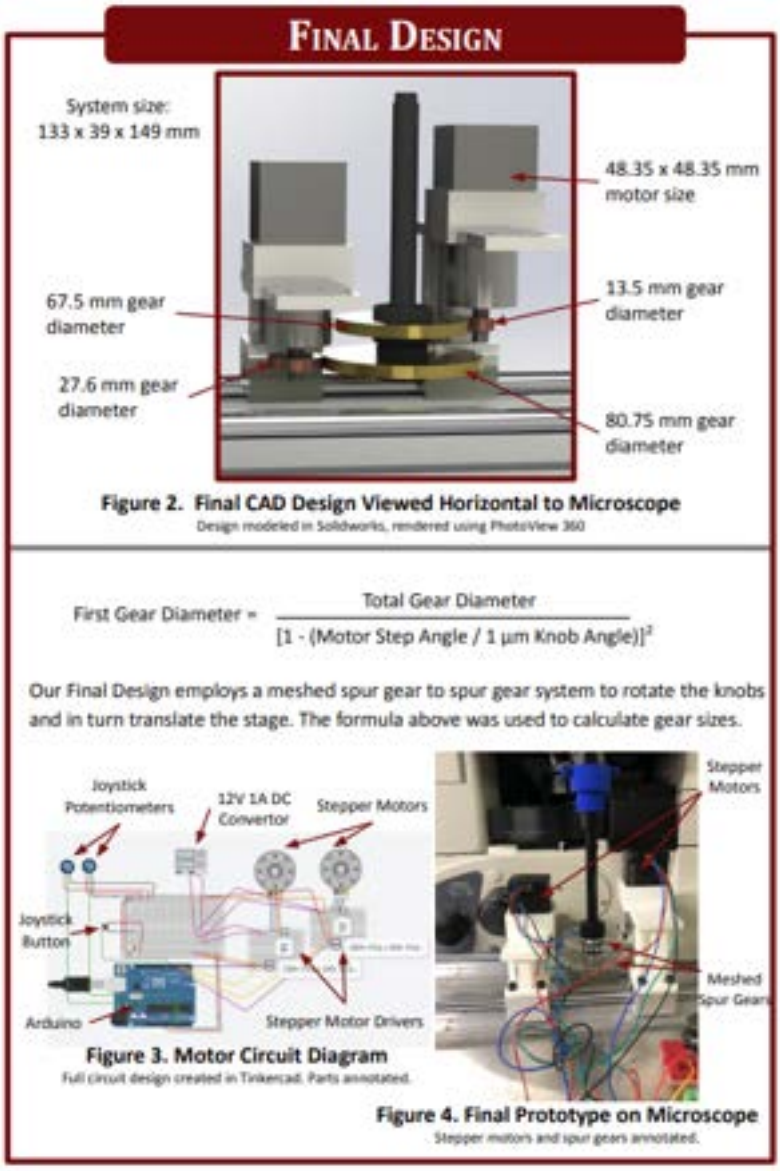

1.
2. created new gears with more customized sizing positioned motors differently
3. still on table but a lot smaller and not as much space to the side of the microscope
4. wiring still all over and not super secure
5. adjustable motor location to move the motors to account for repositioning and take on and off
6. joysticks not as good as wanted
7. used DC converter, stepper motors, breadboards, Arduino Microcontroller, stepper motors drivers and joysticks
8. Still no housing for electrical- also not stable, maybe sautering

Relevant Information:

Future Work (for current design semester):

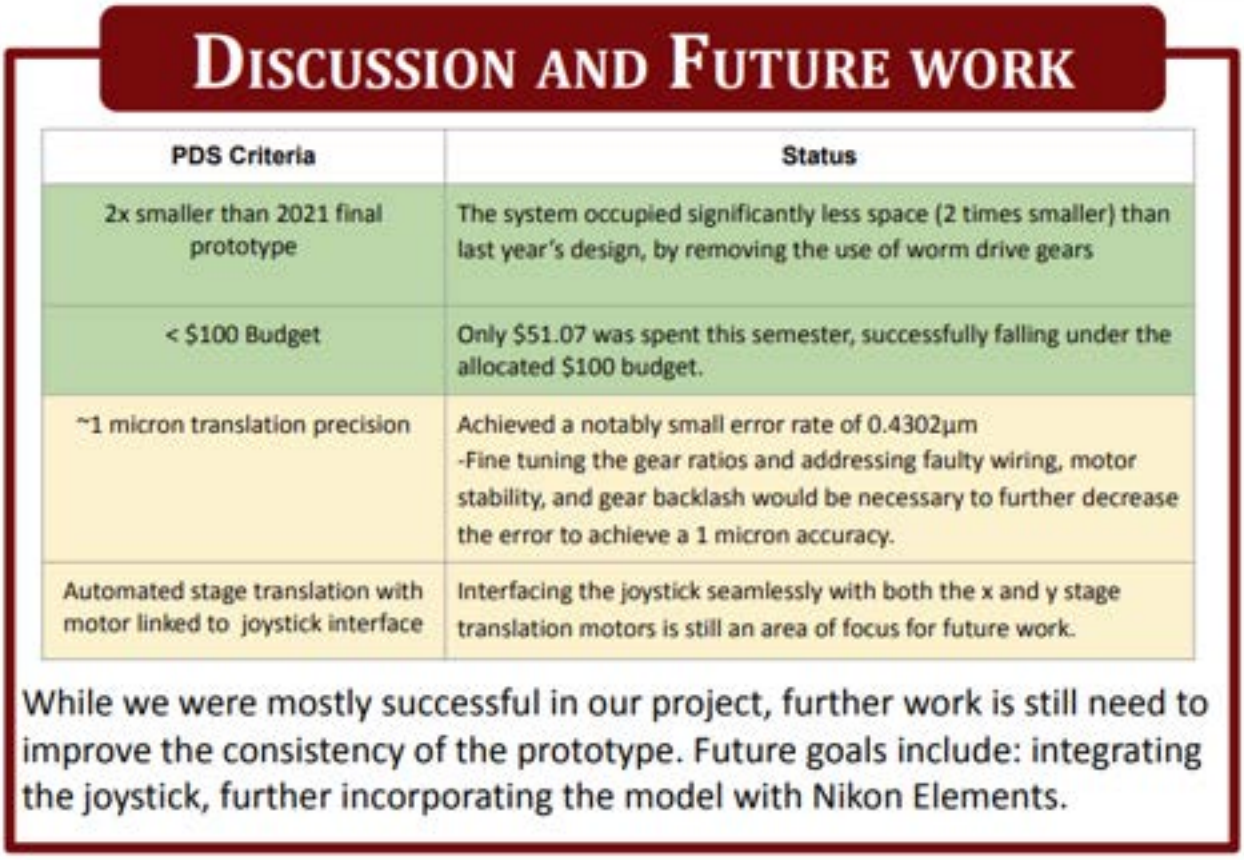

1. Consistency
2. adding the joysticks needs work
3. faulty wiring
4. lessen error rate
5. gear ratios
6. motor stability
7. gear backlash- what is that

Conclusions/action items:

1. Talk to client and see if future work still aligns with goals or if anything needs adding or removing
2. schedule meeting with client- potentially weekly (THINK OF QUESTIONS TO ASK)
3. assign tasks for the next week with research and understanding

past PDS_for understanding

JULIA SALITA - Sep 10, 2023, 4:13 PM CDT

Title: All past PDS's

Date: 9/10/2023

Content by: Julia Salita

Goals: To have all past Product design specifications in one place

Content:

1. Fall of 2020:
    1. None
2. Spring of 2021:
    1. None
3. Fall of 2021:
    1. document 1
4. Spring of 2022:
    1. document 2
5. Fall of 2022:
    1. document 3

Conclusions/action items:

read them all through

JULIA SALITA - Sep 10, 2023, 4:16 PM CDT

Download

Product_Design_Specifications_microscope_fall21.pdf (114 kB) Document 1

JULIA SALITA - Sep 10, 2023, 4:16 PM CDT

Download

Product_Design_Specifications_microscope_spring22.pdf (198 kB) Document 2

JULIA SALITA - Sep 10, 2023, 4:16 PM CDT

Download

Preliminary_PDS_-_Microscope_Stage_fall22.pdf (110 kB) Document 3

Clip-on, Gear-Belt Design Julia Salita

JULIA SALITA - Sep 28, 2023, 3:43 PM CDT

Title: Clip-on, Gear-Belt Design

Date: 9/28/2023

Content by: Julia Salita

Present:

Goals: to create a new design or alter an existing one to meet the outlined requirements and wants of the project

Content:

1. Refer to PDF below for image
2. Based on past semesters Ideas/execution's and bringing them together
3. similar casing and motor attachment (the gear assembly) to semester 5's design
4. casing attachment as semester 2's -mounted to manual control rod - potentially stage
5. belt to secure gears is similar to semester 5's design idea but rather than the gears not toughing the belt acts as another security in holding the gears in place and maintaining accurate rotation (makes sure it turns the same every time by making sure there is no slip.
6. new attachment to microscope, while similar to semester 2's design it is attached to the pole of the manual control knobs by cliping it in place- potentially a screw should the clip not be sufficient
7. Materials and methods of fabrication:
    1. 3D printed motor casing and microscope attachment- heat resistant
    2. laser cut gears- strong and light weight, great result with acrylic
    3. rubber (or substitute)- for belt and on clip on sight to increase friction and ensure non-slip
    4. No metal besides all electrical components and potentially a screw or two to secure objects of the design

Conclusions/action items:

add to design matrix or modify before addition and write and complete design matrix and write preliminary report and presentation.

JULIA SALITA - Sep 28, 2023, 3:44 PM CDT

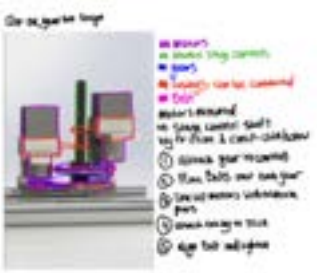

Download

Clip-on_gear-belt_design_-_julia_salita.pdf (387 kB)

Shaft stability

JULIA SALITA - Dec 15, 2023, 3:26 PM CST

Title: Shaft Stability

Date: 12/15/2023 - did this on 12/3/2023

Content by: Julia Salita

Present: All

Goals: to document my idea for shaft stability without refabrication

Citations:

Content:

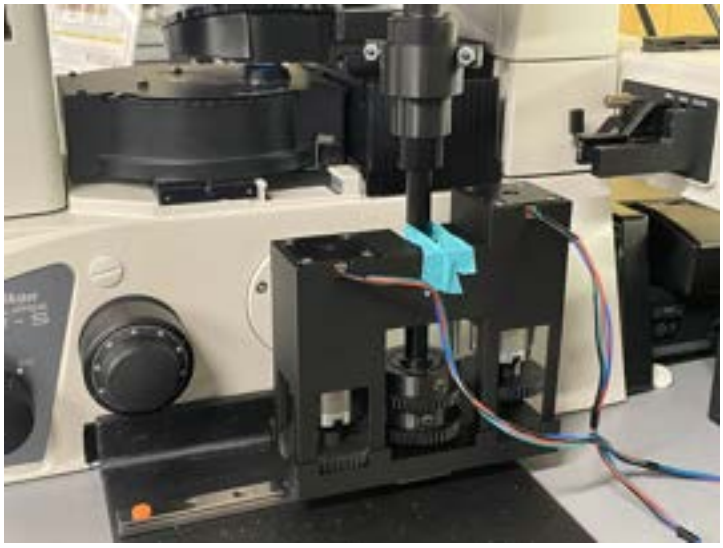

1. The blue tape is folded in the middle to not stick in case the shaft needs to rotate.
2. The sticky part of the tape was placed on one side of the device while the folded part was wrapped around the shaft then the other side of the sticky tape was stuck to the device.
3. This is a temporary fix as an issue with the shaft sliding out of place occurred during testing however because testing was done over a weekend re-fabrication was not able to happen because of the time it takes to reprint.

Conclusions/action items:

1. this fix worked really well for what we needed to accomplish
2. in the future incorporate a locking mechanism into the motor mount design to be able to hold the shaft without tape. you do need a tight fit though!
3. we ended up getting pretty good results overall once we started using the tape piece, where as we couldn't even really collect data without it.

Osha and biosafety lab training

JULIA SALITA - Mar 23, 2023, 2:29 PM CDT

Title: training documentation

Date: 3/23/2023

Content by: Julia Salita

Present: Myself

Goals: to earn my certifications to work in the required lab.

Citations: Training information look up tool

Content: See below

Conclusions/action items:

I Passed

JULIA SALITA - Mar 23, 2023, 2:28 PM CDT

Download

Lab_safety_training.pdf (91.5 kB)

Green Permit and red permit

JULIA SALITA - Oct 11, 2023, 8:22 PM CDT

Title: Green and Red Permit

Date: 3/23/2023

Content by: Julia Salita

Present: Myself and TeamLab Staff

Goals: record completion of training

Citations: TeamLab staff and training

Content:

see images below

Conclusions/action items:

I Passed! Wasn't sure I was going to.

JULIA SALITA - Mar 23, 2023, 2:33 PM CDT

Download

1678376160.7803311.jpg (4.91 MB)

JULIA SALITA - Oct 11, 2023, 8:22 PM CDT

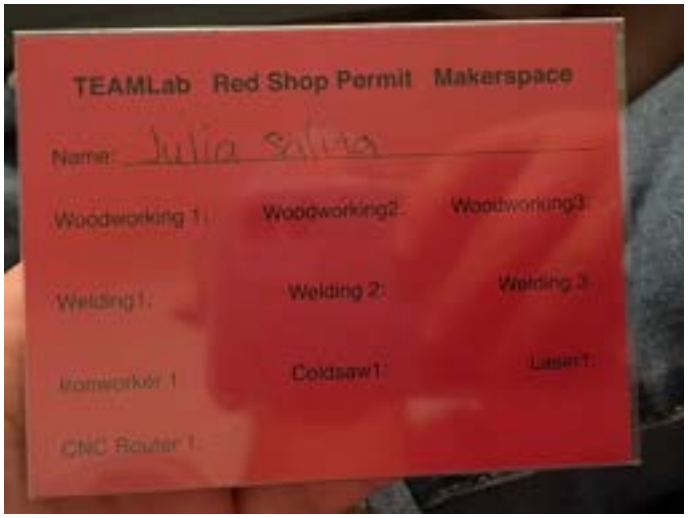

Download

Red_permit_training.jpg (239 kB)

PDS

Title: PDS Contributions

Date: 10/11/2023

Content by: Julia Salita

Present: mix between alone and team when working on deliverable

Goals: to outline what I specifically wrote in the PDS

Citations:

1. in document

Content:

1. **<u>Client Requirements:</u>**
    1. The device must be a motorized mechanism that controls the stage movement through the manual stage adjustment knobs.
    2. The stage should be movable by using a joystick, computer keys, or by inputting values into the user interface.
    3. The movements of the stage should be precise down to the micron range, with acceptable deviations within one order of magnitude.
    4. The software created must be integrated into the existing NIS-elements software and assist in both taking images of the field of view and stitching them together.
    5. The device will be powered by the wall outlets in the lab.
    6. The project must remain under a final cost of 100 US dollars.
2. a. *Performance Requirements:*
    ii. The device should be able to adjust the microscope stage in both the x-axis and the y-axis using the manual adjustment knobs
    iii. The software must be able to participate in image sequencing and be easy to use
    iv. The field of view should be movable by using an interfaced joystick or computer keys such as the keypad arrows
3. *Life in Service*
    i. The device should be reliable and last at least 10 to 15 years [5].
    ii. The device should not break easily and withstand daily wear and tear.
    iii. The device should be capable of undergoing regular sanitation via autoclaving and/or harsh cleaning chemicals
4. *Shelf Life*
    i. To ensure the longevity of the device while stored, the device should be kept dry and at regular room temperature and pressure.
    ii. All materials used for the device should be stable at standard lab temperature and humidity conditions.

iii. The device should be able to be stored either attached or detached from the microscope at normal room conditions.

5. *Ergonomics*
   i. The device must be small and not disrupt the normal operation of the Nikon TI-U and Olympus IX71 microscopes.
   ii. The software must be operable with the nikon elements software and must have a user-friendly interface.
6. *Size*
   i. The device should take little to no table space next to the microscope.
   ii. Ideally, the entire device should be encased to minimize device interference and malfunction due to exposure.
7. *Weight*
   i. The device should be lightweight to minimize interference and damage to the function of the microscope.
   ii. Weight should not limit usage and accessibility of the microscopes for all users.
8. *Aesthetics, Appearance, and Finish*
   i. The device should not be distracting to the user.
   ii. The final product should be neat and blend in with surrounding equipment.
   iii. All edges should be smooth and not pose a threat to users operating the device.
9. *Target Product Cost:*
   i. The target budget is to remain under a total of $100 for the final cost of the device.
   ii. The allocated budget for development is $300.
   iii. The team should use previously purchased materials to keep costs low and reduce waste, however, the team should present the final total price to reflect the total cost if the device is to be replicated.
10.

Conclusions/action items:

SOME of these were collaborations in wording, but for most of them I wrote them and then some editing was done. there were a few that I did not write but heavily helped re-word.

Design Matrix

JULIA SALITA - Oct 11, 2023, 8:41 PM CDT

Title: Design Matrix Contributions

Date: 10/11/2023

Content by: Julia Salita

Present: mix between alone and team when working on deliverable

Goals: to outline what I specifically wrote in the Design matrix

Citations:

1. in document

Content:

1. was done in Jewish high holidays so not as much as normal was contributed
2. Cost: The cost category is scored based on the expenses of the materials as well as any additional costs associated with the use of machinery for fabrication of the final product. The score for this criteria is ranked high in the design matrix compared to other categories because one of the project's main goals is to create the device for an affordable price. The materials and fabrication of the device should remain under or close to $100 as outlined in the cost section of the PDS (Appendix 1).
3. **Cost:**

   The spur gear and worm drive designs scored the highest because all of the parts to fabrication are relatively simple and come from methods such as 3D printing and laser cutting which are rather inexpensive processes. The linear rails design scored lower due to the projected cost of the materials. The materials and fabrication needed to create the rails and attachment pieces are estimated to cost more.
4. **Safety:**

   The spur gear and worm drive designs scored slightly lower on safety due to the positioning of the device. The device is closer to where the person operating the microscope is residing, which increases the possibility of an injury, such as pinching, to the user of the microscope.

Conclusions/action items:

The design matrix was completed on time and now to have a client meeting to discuss designs

Preliminary Presentation

JULIA SALITA - Oct 11, 2023, 8:46 PM CDT

Title: Preliminary Presentation Contributions

Date: 10/11/2023

Content by: Julia Salita

Present: alone for part and with team for part

Goals: to complete my necessary slides for the preliminary presentation

Citations: in document

Content:

see images below

Speaker notes:

background

- We are currently working with 2 microscopes. Our primary microscope is the nikon eclipse TI-U microscope and the other is an olympus IX71 microscope.
- Both models have a dangling stage control knobs (point) that have one knob to move the stage in the x direction and one in the y direction.
- Currently all existing motorized stages are relatively expensive with a price point in the 1,000s or the cheaper versions, which are still expensive, are not as accurate or move in large steps (multiple mm not micrometers).
- Current models also require stage alteration or replacement which are not easily removed from the microscope. Lastly, the microscopes interface with the nikon elements software but are not capable of image sequencing.

Competing designs

- Currently there are many competing designs on the market but today I will only be able to talk about three.
- The first is the OpenFlexture project which is an open source project. It includes a 3D printed microscope and stage which has an astounding sub-micron mechanical positioning. However, it costs about 200 dollars to make and it requires the creation and use of the microscope the stage is compatible with.
- the second option is a market available XY motorized stage by Zaber. This model replaces the current stage and is accurate within 12 micrometers. This option is also relatively expensive with a price point between 5,000 and 9,000 dollars.
- the third is an article that gives step by step instructions on how to build a 3D printed motorized stage for an inverted fluorescence microscope. This design has high accuracy in both the X and Y directions. However there is no price point given and this design alters the existing stage.

Conclusions/action items:

PRACTICE for the presentation!!! You got it!

Background

- Microscope set up:
  - Nikon Eclipse TI-U
  - Olympus IX71
  - hanging X and Y control knobs
- All available motorized models are:
  - expensive
  - require stage alteration/replacement
- The current microscopes do interface with Nikon elements software, but do not possess image sequencing capabilities.

Department of Biomedical Engineering
UNIVERSITY OF WISCONSIN-MADISON

Figure 1: Nikon TI-U Microscope [1].

Figure 2: Olympus IX71 microscope set up [1].

Competing Designs- Julia

- OpenFlexture project - open source
  - Open source
  - 3D printed microscope and stage
  - sub-micron (<0.1 μm) mechanical positioning
  - Approximately $200 [1].
- ASR series motorized XY microscope stages by Zaber [2]. - market available
  - rebuild/replace stage
  - accurate with in 12 μm
  - cost between $5,000-$9,000
- open source 3D printed inverted fluorescence microscope stage.
  - Accuracy:
    - X- (5.1 ± 1.8 μm; −4.9 ± 1.9 μm)
    - Y- (3.5 ± 2.2 μm; −5.0 ± 1.1 μm)
  - includes all materials list, instructions, software and CAD files [3].
  - altered existing stage

Department of Biomedical Engineering
UNIVERSITY OF WISCONSIN-MADISON

Figure 3: OpenFlexure Microscope and motorized stage [1].

Figure 4: Zaber's ASR series motorized XY microscope stages [2].

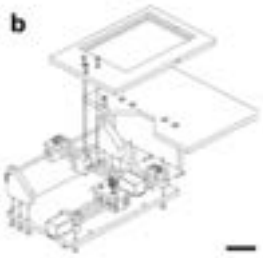

Figure 5: Open source 3D printed motorized positioning stage for automated high-content screening microscopy [3].

Final Report

JULIA SALITA - Dec 15, 2023, 3:15 PM CST

Title: Personal contributions to the Final report

Date: 12/15/2023

Content by: Julia Salita

Present: Julia Salita

Goals: To document the sections I wrote in entirety

Citations:

Content:

Testing

The testing phase of this project aimed to assess the performance and capabilities of the automated microscope positioning system. The primary components used for testing included a slide with fluorescent beads viewed using the Nikon Ti-U inverted fluorescence microscope, a universal joint connector, and the motorized positioning device. For direct connection testing, the universal connector was securely fastened to the X-axis manual control knob and the stepper motor, as seen below in Figure 17. For linear motion and loss of motion testing, the motorized device was secured to the microscope with the dual stepper motor mount placed on the carriage and lined up with the gears, as seen above in Figure 16.

Figure 17: Direct connection testing set up. The universal joint connector is securely fastened to the x-axis manual control knob and the selected stepper motor.

The team performed three distinct tests: Direct connection, loss of motion, and linear motion. The direct connection test was aimed at recording and quantifying the capabilities of the motors and the manual knobs. This test sought to determine the optimal gear ratio for the motorized positioning device to achieve the movement specifications outlined in the *Physical and Operational Characteristics: Accuracy and Reliability* section of the PDS (Appendix A). The loss of motion test was necessary to ascertain the quantity of movement lost when the device changes direction. Establishing a consistent loss of motion buffer will aid in a future calculation to convert an inputted distance to an associated number of required motor steps. Finally, linear motion testing aims to measure a consistent stage displacement per motor step while mitigating loss of motion error. The results of linear motion testing will also contribute to establishing a calculation to convert inputted stage displacement into the required amount of motor steps.

For each test, a fluorescent bead slide was placed on the stage, ensuring the slipcover face was positioned downward on the stage. The microscope was turned on and set to the predetermined settings for the distinct test. For all testing, the motors moved the

device along one axis and direction until no loss of motion was ensured, and a starting image was captured. During direct connection and linear motion testing, the motors were automated to move between 150-400 steps along the same axis and direction. However, for loss of motion testing, the motor was automated to move between 400-600 steps along the same axis but in the opposite direction. A final image was captured, and this process was repeated until ten data points were collected. The linear motion and loss of motion procedures were repeated along the same axis but with a different number of steps and along the other axis with two different amounts of steps. For full written out steps refer to Testing Protocols (Appendix F).

The images were saved and sorted into different folders on a thumb drive. The photos were then uploaded to folders on personal devices. The images were then put through Fiji: ImageJ to overlay the initial and final photos for data collection. The data was then stored and combined into a large spreadsheet (Appendix G).

A possible source of error while testing could stem from the gears not meshing properly. The gear attached to the Y-axis stepper motor did not always have a tight fit against the gear attached to the associated manual control knob. The poor gear meshing may result in issues with gear catching or consistent and accurate movement. Additionally, the error may be due to the lack of a locking mechanism to hold the control knob shaft to the positioning device, which allowed for the knob to slide and move. To mitigate sliding, the team placed tape with a folded-over center around the shaft to hold the manual knobs in proper placement with minimal rotational friction, as pictured above in Figure 16.

Ethical considerations

When developing a device that functions in a regulated environment, ethical considerations must be addressed to ensure the safety and inclusion of all. Ethics surrounding research while designing a new device with possible hazards must take sufficient information and understanding, well-being, and safety into consideration. The research should consist of excellent quantity and quality to provide a complete understanding of appropriate design parameters to aid in choosing the correct design path. Additionally, honesty and providing proper credit is a substantial focus of research ethics.

Finally, inclusivity is a noteworthy ethical consideration during the design process because it allows the device to be available to all people of different backgrounds. Thus, the motorized positioning device considered economics, usability, and adaptability throughout prototype development. The chosen design allows for restricted and lower-budget projects to gain access to the necessary technology. The devices' usability makes for an easy transition between motorized and manual microscope use. Easy usability also allows for a simple learning curve of how to operate the device, which can help learners understand the functions of the microscope faster. Finally, the adaptability of the motorized device allows for control placement adjustment to aid in accommodating those with lower or limited mobility to participate in using the microscope.

Sources of Error

Several sources of error must be scrutinized to identify and potentially resolve inconsistencies, limitations, and inaccuracies. Fabrication tolerances, such as those acquired during 3D printing, must be considered. Tolerances are especially prominent in accuracy-dependent areas of design, such as the gears, because the error may compound. Incorporating tolerances of fabrication methods into the design allows for error mitigation in aspects of the device, such as gear meshing.

A second source of error is poor gear meshing. Occasionally, the device would function inconsistently with previous movements. While improvement may always be achieved, gear meshing with the X-axis gears was smooth with little inconsistencies. However, the Y-axis gears had trouble interlocking as the gears were not as close together as they should have been. Poor gear engagement caused significant inconsistencies when measuring the movement per motor step and loss of motion.

Additionally, a third source of error, which results in testing variability, could stem from leeway in the motor and control knob. During testing, there were some issues with the control knob deflecting away from the gears. While the accuracy of the motors and control knobs is of substantial quality, no design is ever one hundred percent perfect. Considering errors in the pre-built aspects of the design allows for realistic expectations that aid in improving the design to reduce the resulting errors.

Finally, while it is not a source of error, it is essential to consider flaws in small-scale positioning. Small-scale positioning may have more error in accuracy compared to large-scale movement positioning. This error can be from many aspects, such as loss of motion, gear meshing, and tolerances. Due to the stages' small scale of movement, inconsistencies are highly showcased, while grander movements allow for less error. For example, with loss of motion, should the motors move an average buffer, the loss of motion will not be exact every time. Small distances may cause no movement or a relatively sizable overshoot of movement. With larger-scale movements, even when the loss of motion buffer is inaccurate, the sizable movement allows for the loss or gain of only a tiny distance.

Conclusions/action items:

1. overall report writing went well. However, my schedule was really different than my groups so I had to work on it a little later than the rest of my group. I got it done with more than enough time though.
2. Turn it in!

Project Summary and Overview

SAWYER BUSSEY - Sep 17, 2023, 2:31 PM CDT

Summary:
Create a precise motorized stage for an inverted fluorescence microscope for under $100 so that more precise and efficient measurements can be done, while making it accessible to those with inadequate funding to purchase expensive alternatives.

Overview:
The two inverted fluorescent microscopes in the teaching lab of the Engineering Centers Building utilize stages that must be manually moved with two adjustable knobs. This method of adjusting the stage is not precise and does not allow for automated imaging of coordinate based locations. The current adjustment system also does not allow for a reference of the distance traveled which further decreases the precision of the instrument. Solutions for this problem do exist, however, they are costly. Kits and instructions to fix this problem go only as low as approximately $300 dollars. Microscopes with built in motorized adjustment systems can be as expensive as $70,000 new and $19,000 used. To increase the availability and widespread use of this type of solution, we aim to build ours for under $100. Our goal is to improve upon the previous designs, maintain accuracy of the instrument throughout the testing process, and to have a movement resolution of one micrometer (1µm).

9/14/2023 - Week 1 Progress Report

SAWYER BUSSEY - Sep 28, 2023, 10:59 PM CDT

Title: Week 1 Progress report

Date: 9/14/2023

Content by: Sawyer Bussey

Present: Sawyer Bussey

Goals: Report on progress of week 1

Content:

Microscope Low Cost Motorized Stage

Client: Dr. John Puccinelli

Advisor: Dr. Joshua Brockman

Team Members: Tyler Haupert, Julia Salita, Nicholas Symons, Sawyer Bussey, Zhaoyun Tang

Name	Email	Role
Tyler Haupert	thaupert@wisc.edu	Team Leader
Julia Salita	jsalita@wisc.edu	BSAC
Nicholas Symons	nsymons@wisc.edu	Communication
Sawyer Bussey	bussey2@wisc.edu	BWIG
Zhaoyun Tang	ztang259@wisc.edu	BPAG

Reporting Period: September 8th, 2023 - September 14th, 2023

Problem Statement:

The UW-Madison BME teaching lab currently houses two inverted fluorescent microscopes. While these contemporary pieces of equipment are functional in their current state, they leave a great deal to be desired when it comes to laboratory efficiency. Motorized alternatives do exist, however, cost continues to be a factor limiting the exposure students have to this technology. With a working budget of approximately $100, our team seeks to revolutionize the precision and automation of these microscopes through the creation of a novel microscope stage moving device. This design will allow for sequential, automated imaging of coordinate-based locations on slides. The creation of this device will increase the consistency of measurements, reduce the amount of time spent during data collection, and lower the learning curve for operating this equipment. To remain competitive, design prototypes should be automated in both the X and Y directions and retain high precision and accuracy in translations (1 μm resolution).

Brief Status Update:

On Friday (9/8/2023) all 5 members of the team met and went through introductions. The team met with the advisor and established short term goals to guide group participation. On Monday, the team met independently for the first time to discuss role-specific and team goals. After the meeting, the communicator sent an email to the client with hopes to meet before the advisor meeting (9/15/2023 @ 12:30 pm).

Summary of Weekly Team Member Design Accomplishments:

- Team:
  - The LabArchives were purchased and shared to all members, a team photograph was taken, and team roles were decided. Following the meeting, folders were added to the shared google drive and documents such as the first progress report, the PDS, and meeting notes were created. All members of the team have begun preliminary research into the work of previous groups, market competition, and other resources.
- Tyler Haupert (Team Leader):
  - Reviewed material from previous BME group(s). Investigated current market-available and open-sourced alternatives to our design. Began brainstorming solutions to previous project complications as well as entirely new solutions to the problem at hand. Wrote up a discussion outline prior to the first team meeting to help all members understand their roles and responsibilities. Added questions to the cumulative team document in anticipation of client meeting.
- Julia Salita (BSAC):
  - Reviewed and learned material from past BME teams assigned this project
  - Closely reviewed each model and iteration of past semesters work to have a deeper understanding of the design
  - Created and organized folders in shared design space for current and future documents
  - Created templates for all major assignments and deliverables for future use
  - Created documents to track all pressing questions for the teams advisor and client
- Nick Symons (Communicator):
  - Researched competing designs such as the OpenStage and how they function. Looked at in-depth explanations for how individual components of the OpenStage system works and how Turner Lab made the OpenStage easy enough to build that anyone could replicate it and change the design to fit their needs.
- Sawyer Bussey (BWIG):
  - Researched previous design team's milestones and accomplishments in order to understand what needs to be improved upon for our design
  - Went to the teaching lab to view the microscope that will be benefiting from our design.
  - Uploaded team photo to the project website as well as progress report
- Zhaoyun Tang (BPAG):
  - Reviewed and Studied designs from previous BME groups assigned to this project.
  - Researched about microscope motorized stage to learn more about the project.
  - Went to the teaching lab to view the final product of past groups.

Activities:

Date	Name	Task	Time (hours)	Weekly Total	Semester Total
9/8-9/13	Team	- team meeting to go over first day activities and establish	- 1 - 1	3	3

		roles - team meeting to clarify expectations, set client meeting, and begin work on research and PDS - Client meeting	- 1		
9/11 9/13	Tyler	• Team meeting • Independent research • Progress report • Team meeting outline and notes • Client questions	- 1 - 1 - 1 - 2 - 0.25	5.25	5.25
9/11	Zhaoyun	• Team meeting • Research • Client questions • Fill out progress report	- 1 - 1 - 0.5 - 0.25	2.75	2.75
9/11 9/13	Nick	• Team meeting • Intro email to Dr. Puccinelli • Research • Progress report	• 1 • .5 • 2 • .25	3.75	3.75
9/11 9/14	Sawyer	-Team meeting -Visited teaching lab to view microscope -upload team photo and progress report -Project Research -Upload progress report	-1 -0.5 0.25 1 0.25	3	3
		•			

Weekly/Ongoing Difficulties:

No current difficulties.

Upcoming Team and Individual Goals

- Tyler Haupert:

    - Continue working on and documenting project research and begin drawing up ideas for brainstorming meetings. Create PDS documents and begin documenting design specifications and requirements. Do more research into competing designs to better understand how their principles could be re-engineered into a more cost-effective alternative.
- Nick Symons:
    - Research information on the microscopes that we'll work with along with existing solutions and previously attempted solutions. Begin documenting all research.
- Sawyer Bussey:
    - Research methods of creating software that will aid the programming of our project
    - Research issues associated with the model of microscope we are working to improve
    - Complete PDS
    - Create questions for the client to improve understanding of the overall project as well as expectations upon completion.
- Zhaoyun Tang:
    - Conduct individual research to understand the project. Start thinking about ideas that can help the team to complete this project. Work with the team to complete the PDS.
- Julia Salita:
    - Complete additional research on the design from past semesters to get a better understanding of the calculations and numerical data collected
    - Complete the PDS according to past design semesters and new and relevant design criteria provided by the client
    - Brainstorm and document new ideas for improvement or redesign of the current set up.

Project Schedule/Timeline:

Project Goal	Deadline	Team Assigned	Progress	Completed
Product Design Specifications	9/22	All	0%	No
Design Matrix	9/29	All	0%	No
Preliminary Presentations	10/6	All	0%	No
Preliminary Deliverables	10/11	All	0%	No
Show and Tell	11/3	All	0%	No
Poster Presentations	12/8	All	0%	No
Final Deliverables	12/13	All	0%	No

Expenses:

- No Purchases as of 9/13

9/21/2023 Week 2 progress report

Title: Week 2 Progress report

Date: 9/21/2023

Content by: Sawyer Bussey

Present: Sawyer Bussey

Goals: Report on progress of week 2

Content:

Microscope Low Cost Motorized Stage

Client: Dr. John Puccinelli

Advisor: Dr. Joshua Brockman

Team Members: Tyler Haupert, Julia Salita, Nicholas Symons, Sawyer Bussey, Zhaoyun Tang

Name	Email	Role
Tyler Haupert	thaupert@wisc.edu	Team Leader
Julia Salita	jsalita@wisc.edu	BSAC
Nicholas Symons	nsymons@wisc.edu	Communication
Sawyer Bussey	bussey2@wisc.edu	BWIG
Zhaoyun Tang	ztang259@wisc.edu	BPAG

Reporting Period: September 15th, 2023 - September 21st, 2023

Problem Statement:

The UW-Madison BME teaching lab currently houses two inverted fluorescent microscopes. While these contemporary pieces of equipment are functional in their current state, they leave a great deal to be desired when it comes to laboratory efficiency. Motorized alternatives do exist, however, cost continues to be a factor limiting the exposure students have to this technology. With a working budget of approximately $100, our team seeks to revolutionize the precision and automation of these microscopes through the creation of a novel microscope stage moving device. This design will allow for sequential, automated imaging of coordinate-based locations on slides. The creation of this device will increase the consistency of measurements, reduce the amount of time spent during data collection, and lower the learning curve for operating this equipment. To remain competitive, design prototypes should be automated in both the X and Y directions and retain high precision and accuracy in translations (1 μm resolution).

Brief Status Update:

This week the team's primary goal was to complete the PDS. The team had our first meeting with our client, Dr. Puccinelli, and our first meeting with our advisor, Dr. Brockman on Friday September 15th.

Summary of Weekly Team Member Design Accomplishments:

- Team:
  - This week the team met with Dr. Brockman on Friday. During this meeting we established goals, timelines, and went over the project to fine tune our understanding. Following this meeting we began to work on the PDS, and met as a team on monday to reassess and collaborate on it. As of now, the project is not completely finished, but is almost there.
- Tyler Haupert (Team Leader):
  - Worked on PDS, researching various topics relevant to drafting of PDS. Began sketching up brainstorming ideas on personal IPad. Documented work in LabArchives
- Julia Salita (BSAC):
  - Met with our client and had numerous questions answered
  - Started PDS and have minimal work left in order to complete the PDS
  - Conducted additional research
  - Attended weekly BSAC meetings and discussed ways to improve teaching BME 200 student and implemented those suggestions
- Nick Symons (Communicator):
  - Met with client to see the microscopes that we'll be working with
  - Researched types of stepper motors and gearboxes
  - Worked on PDS
- Sawyer Bussey (BWIG):
  - Uploaded previous weeks progress report
  - Worked on pds
  - Researched microscope standards
  - Researched type Nikon software used by the microscopes
- Zhaoyun Tang (BPAG):
  - Met with our client and had our question answered
  - Worked on the PDS
  - Research

Activities:

Date	Name	Task	Time (hours)	Weekly Total	Semester Total
9/15-9/21	Team	- Team Zoom Meeting - Advisor Meeting	- 0.5 - 1.5	2	5
9/17	Tyler	• PDS work	- 3	5	10.25

		• Competition research • Lab standards research • meeting notes	- 0.5 - 0.5 - 1		
9/11	Zhaoyun	• PDS work • Research • Progress Report	• 2 • 1 • .25	3.25	6
9/18	Nick	• PDS work • Research • Progress report	• 1 • 1 • .25	2.25	6
9/19 9/21	Sawyer	• Researched previous year's groups • Worked on pds • Worked on progress report	1 1 0.5	2.5	5.5
9/18 9/20 9/20	Julia	• PDS • Additional Research: for PDS like standards…	- 1 hour - 2 hours - 1 hour	4	10 -(I did work last week but missed the chart)

Weekly/Ongoing Difficulties:

The team has run into a slight issue with accessing necessary components to the project due to the Engineering Centers Building being flooded. The team will not have access to either microscope and the accompanying software until the damages have been repaired. The team will also not have access to the past semester's physical project. Any fabrication using those materials or any measurements needed will not be obtainable until the building is re-opened or a solution to retrieving the project is found.

Upcoming Team and Individual Goals

- Tyler Haupert:
  - We hope to finish, finalize and turn in the PDS by tomorrow at 9 pm. Following this, we will begin drawing up our design solutions and drafting the design matrix, which is due next friday.
- Nick Symons:
  - Start coming up with design ideas. New ideas and improvements on past designs

    - Submit the PDS by Friday
    - Continue to research past designs and how to improve on them
- Sawyer Bussey:
    - Finish PDS, join each bullet into organized and legible paragraphs
    - Create a design to bring to advisor meeting friday
    - Sketch design
    - Brainstorm further designs after team and advisor meeting friday

- Zhaoyun Tang:
    - Help finish the PDS by friday.
    - Brainstorm and try to come up with design ideas before the Friday meeting.
    - Do more research.
- Julia Salita:
    - Finalize and turn in the PDS- by Friday the 21st
    - Propose alterations to current set up or present new design ideas
    - Find a solution to retrieving past semesters physical work for further development of our project

Project Schedule/Timeline:

Project Goal	Deadline	Team Assigned	Progress	Completed
Product Design Specifications	9/22	All	90%	No
Design Matrix	9/29	All	0%	No
Preliminary Presentations	10/6	All	0%	No
Preliminary Deliverables	10/11	All	0%	No
Show and Tell	11/3	All	0%	No
Poster Presentations	12/8	All	0%	No
Final Deliverables	12/13	All	0%	No

Expenses:

- No Purchases as of 9/21

9/28/2023 Week Three Progress Report

Title: Week 3 Progress report

Date: 9/28/2023

Content by: Sawyer Bussey

Present: Sawyer Bussey

Goals: Report on progress of week 3

Content:

Microscope Low Cost Motorized Stage

Client: Dr. John Puccinelli

Advisor: Dr. Joshua Brockman

Team Members: Tyler Haupert, Julia Salita, Nicholas Symons, Sawyer Bussey, Zhaoyun Tang

Name	Email	Role
Tyler Haupert	thaupert@wisc.edu	Team Leader
Julia Salita	jsalita@wisc.edu	BSAC
Nicholas Symons	nsymons@wisc.edu	Communication
Sawyer Bussey	bussey2@wisc.edu	BWIG
Zhaoyun Tang	ztang259@wisc.edu	BPAG

Reporting Period: September 22nd, 2023 - September 28th, 2023

Problem Statement:

The UW-Madison BME teaching lab currently houses two inverted fluorescent microscopes. While these contemporary pieces of equipment are functional in their current state, they leave a great deal to be desired when it comes to laboratory efficiency. Motorized alternatives do exist, however, cost continues to be a factor limiting the exposure students have to this technology. With a working budget of approximately $100, our team seeks to revolutionize the precision and automation of these microscopes through the creation of a novel microscope stage moving device. This design will allow for sequential, automated imaging of coordinate-based locations on slides. The creation of this device will increase the consistency of measurements, reduce the amount of time spent during data collection, and lower the learning curve for operating this equipment. To remain competitive, design prototypes should be automated in both the X and Y directions and retain high precision and accuracy in translations (1 μm resolution).

Brief Status Update:

This week the team submitted the PDS, began the design matrix, and met with the advisor. Decisions about design prototypes and future directions were made during two team meetings that took place on monday and thursday. The Progress report will be finalized, submitted, and sent out on Friday the 29th (tomorrow).

Summary of Weekly Team Member Design Accomplishments:

- Team:
    - This week the team met with Dr. Brockman on Friday. During this meeting we reviewed our PDS with him and asked him questions regarding formatting, content, and verbosity. We took his feedback into account and submitted our PDS later that night. Following this submission the team focused on brainstorming, drawing designs, and starting the design matrix. The team met on monday and thursday to collaborate on ideas/drawings and work on the design matrix, respectively.
- Tyler Haupert (Team Leader):
    - Documented personal contributions in labarchives
    - Inserted design matrix file in team labarchives folder
    - Worked collaboratively with team to draft and edit out design matrix and justifications
    - Created a drawing for the spur gear design in the design matrix
    - Reviewed previous designs and online sources to come up will possible improvements to the spur gear design used by past groups
        - Size was a concern of the client. I am considering attaching the motors and gears to the microscope via the screw holes available for use. I will need access to the teaching lab to confirm there is enough space to make this possible. If not, I believe smarter choices in 3-D prints and prototype layout could potentially help to create a more compact unit.
- Julia Salita (BSAC):
    - Drafted new preliminary design
    - Referenced past semesters design work to compile information for a new design
- Nick Symons (Communicator):
    - Updated LabArchives with documents and initial design
    - Drafted initial design for design matrix
    - Attended weekly team meeting to start discussing designs
- Sawyer Bussey (BWIG):
    - Updated lab archives
    - Conducted research on worm drive design for design matrix
    - Brainstormed ideas for design matrix
    - Attended meeting to work on design matrix and participated in discussions about possible routes for completion
- Zhaoyun Tang (BPAG):
    - Updated documents on Labarchives
    - Brainstorm ideas for designs
    - Worked on the design matrix

Activities:

Date	Name	Task	Time (hours)	Weekly Total	Semester Total
9/22-9/28	Team	- Advisor Meeting - Team Meeting (Mon) - Team Meeting (Thurs)	- 2 - 1.5 - 1	4.5	9.5
9/25	Tyler	- Brainstorming - Spur gear design research - Design drawings - team meeting notes (both) - design matrix	- 1 - 1 - 0.5 - 1 - 2	5.5	15.75
9/27	Zhaoyun	• Brainstorming • Design matrix • Progress report	- 1.75 - 2 - 0.25	4	10
9/	Nick	• Drafting initial design • Updating lab archives • Progress report	• 2.5 • .5 • .5	3.5	9.5
9/25	Sawyer	• Brainstorming • Design matrix • Progress report • Resarch worm gears and stability improvements	- 1.75 -2 -0.5 -1	5.25	10.75
9/27-28 9/28-9	Julia	• Brainstorming • Updating labarchives	- 2 -2	4	14

Weekly/Ongoing Difficulties:

The primary current difficulty is access to ECB. Design drawings could be much more accurate and to scale if we had access to the microscopes and previous designs. Although some detail will be missing from the drawings in our matrix, the concepts and ideas translated through them should remain valid.

Upcoming Team and Individual Goals

- Tyler Haupert:
  - Update labarchives to fully represent personal and team activities
  - Finalize and review design matrix for submission on 9/29
  - Create and begin working on preliminary presentation
  - Create week 4 progress report
- Nick Symons:
  - Finish and submit the design matrix

    - Continue updating LabArchives with new documents
- Sawyer Bussey:
    - Finish design matrix
    - Upload design matrix to team website
    - Upload sketch of design photos to team website
- Zhaoyun Tang:
    - Help finish the design matrix by Friday
    - Work on Labarchive
    - Attend the BPAG meeting
- Julia Salita:
    - Finish adding all personal contributions, information, and designs to Lab Archives
    - Attend weekly BSAC meeting
    - Work on the preliminary presentation
    - Finish the Design matrix

Project Schedule/Timeline:

Project Goal	Deadline	Team Assigned	Progress	Completed
Product Design Specifications	9/22	All	100%	Yes
Design Matrix	9/29	All	20%	No
Preliminary Presentations	10/6	All	0%	No
Preliminary Deliverables	10/11	All	0%	No
Show and Tell	11/3	All	0%	No
Poster Presentations	12/8	All	0%	No
Final Deliverables	12/13	All	0%	No

Expenses:

- No Purchases as of 9/28

9/28/2023 Product Design Specifications

Title: Product Design Specifications

Date: 9/14/2023

Content by: Sawyer Bussey

Present: Sawyer Bussey

Goals: Report on progress of week 1

Content:

Client Requirements:

1. The device must be a motorized mechanism that controls the stage movement through the manual stage adjustment knobs.
2. The stage should be movable by using a joystick, computer keys, or by inputting values into the user interface.
3. The movements of the stage should be precise down to the micron range, with acceptable deviations within one order of magnitude.
4. The software created must be integrated into the existing NIS-elements software and assist in both taking images of the field of view and stitching them together.
5. The device will be powered by the wall outlets in the lab.
6. The project must remain under a final cost of 100 US dollars.

g. Accuracy and Reliability

i. The device should have a movement resolution of 1µm.

ii. The movements should be repeatable without having to recalibrate the device.

viii. All included materials must be resistant to the degradative effects of harsh chemicals used for regular sanitization of lab equipment.

ix. Plastic gears should be used rather than metal gears to eliminate the need for lubricant, this would decrease the amount of maintenance needed in order to keep the device operational [14]. Additionally, plastic materials will also help to lower cost.

x. Plastic materials expand and lose structure at increasing temperatures. Thus, material choice should consider the rate at which different plastic materials heat or cool.

xi. Materials used for gears should be made out of a plastic with a low thermal diffusivity, which is defined as the thermal conductivity ratio to the specific heat capacity of the material. Materials of large Thermal Diffusivity will respond quickly to changes in heat and Materials of low Thermal Diffusivity will respond slowly [15]. Thermal Diffusivity of PVC (7.8E-6 m^2/s) [16], this is a low Thermal Diffusivity meaning the material heats up slowly. The equation for this value is: =k/pCp

1. a= thermal diffusivity
2. k= material conductivity
3. p=density of material
4. Cp=specific heat of material

Product Design Specifications: Microscope Low Cost Motorized Stage

September 22, 2023

BME 300/200

Clients: Dr. John Puccinelli

Advisor: Dr. Joshua Brockman

Team Members:

Team Leader: Tyler Haupert

Communicator: Nicholas Symons

BWIG: Sawyer Bussey

BPAG: Jerry Zhaoyun

BSAC: Julia Salita

Function:

The inverted fluorescence microscopes of the UW-Madison BME Teaching Lab are manually controlled microscopes that allow users to observe and collect data on cell and tissue culture. While the technology exists to convert these microscopes into motorized and automated devices, it is very expensive and beyond the budget of the school. The client, Dr. John Puccinelli, has requested the fabrication of a device to serve as a solution to this problem. The final working prototype should include mechanical, software, and hardware components to allow for the automation of manual inverted fluorescence microscopes. The physical structures of this device will interface with the manual adjustment knob on the right-hand side of the microscope. It will be capable of moving the stage in a coordinate-based fashion in both the X and Y directions. Software elements will be created to direct the movement of the stage. Finally, the client has also requested the development of software to process and stitch input images to add a scanning feature to the microscopes.

Client Requirements:

1. The device must be a motorized mechanism that controls the stage movement through the manual stage adjustment knobs.
2. The stage should be movable by using a joystick, computer keys, or by inputting values into the user interface.
3. The movements of the stage should be precise down to the micron range, with acceptable deviations within one order of magnitude.
4. The software created must be integrated into the existing NIS-elements software and assist in both taking images of the field of view and stitching them together.
5. The device will be powered by the wall outlets in the lab.
6. The project must remain under a final cost of 100 US dollars.

Design Requirements:

1. Physical and Operational Characteristics:

a. *Performance Requirements:*

. The device should be able to adjust the microscope stage in both the x-axis and the y-axis using the manual adjustment knobs

. The software must be able to participate in image sequencing and be easy to use

. The field of view should be movable by using an interfaced joystick or computer keys such as the keypad arrows

b. Safety

i. The device should not be hazardous.

ii. The device should not harm the user in any way, including electrical shock[1], physical pinching, or loud sound levels.

iii. The device should not damage the microscope while ensuring smooth operation.

iv. The cords of the device should be safely arranged so that it does not block off the user's workspace. Moreover, the cords should not be placed near or be in contact with any liquid.

v. Labeling

	Signifies that the main plug must be disconnected from the wall outlet prior to maintenance [2].
	Indicates that the equipment labeled is suitable for the use of alternating current only [3].
	Specifies that the operator's manual should be referenced and used during use of device [4].

c. Accuracy and Reliability

i. The device should have a movement resolution of 1µm.
ii. The movements should be repeatable without having to recalibrate the device.

d. Life in Service

i. The device should be reliable and last at least 10 to 15 years [5].
ii. The stepper motors have a lifetime of 20,000 hours[6], which translates to 2,500 8 hour work days or 500 5 day work weeks. This matches our requirement of a 10-15 year lifetime.
iii. The device should not break easily and withstand daily wear and tear.
iv. The device should be capable of undergoing regular sanitation via autoclaving and/or harsh cleaning chemicals.

e. Shelf Life

i. To ensure the longevity of the device while stored, the device should be kept dry and at regular room temperature and pressure.
ii. All materials used for the device should be stable at standard lab temperature and humidity conditions.
iii. The device should be able to be stored either attached or detached from the microscope at normal room conditions.

f. Operating Environment

i. The laboratory will be kept within a temperature range of 20-25 degrees celsius with a relative humidity of 35-50 percent [7].
ii. The device will be kept in the BME teaching lab and should be able to operate in the above conditions.

g. Ergonomics

i. The device must be small and not disrupt the normal operation of the Nikon TI-U and Olympus IX71 microscopes.
ii. The software must be operable with the nikon elements software and must have a user-friendly interface.

h. Size

i. The device should take little to no table space next to the microscope.
ii. Ideally, the entire device should be encased to minimize device interference and malfunction due to exposure.

i. *Weight*

i. The device should be lightweight to minimize interference and damage to the function of the microscope.

ii. Weight should not limit usage and accessibility of the microscopes for all users.

j. Materials

i. All materials purchased, altered, and used must comply with the guidelines for a biosafety level 1 laboratory listed in the Biosafety in Microbiological and Biomedical Laboratories (BMBL) 6th Edition [8] by the Centers for Disease Control and Prevention (CDC) [9].

ii. 3D printing should be utilized to print most plastic prototypes using the FDM and FFF printing methods [10], [11].

iii. The Universal ILS9.150D [12] laser cutter will be used to accurately cut precise pieces necessary for maintaining accuracy of movement of the microscope stage.

iv. Soldering [13] may be used to stabilize the electronic connections within the necessary circuitry.

v. All included materials must be resistant to the degradative effects of harsh chemicals used for regular sanitization of lab equipment.

vi. Plastic gears should be used rather than metal gears to eliminate the need for lubricant, this would decrease the amount of maintenance needed in order to keep the device operational [14]. Additionally, plastic materials will also help to lower cost.

vii. Plastic materials expand and lose structure at increasing temperatures. Thus, material choice should consider the rate at which different plastic materials heat or cool.

viii. Materials used for gears should be made out of a plastic with a low thermal diffusivity, which is defined as the thermal conductivity ratio to the specific heat capacity of the material. Materials of large Thermal Diffusivity will respond quickly to changes in heat and Materials of low Thermal Diffusivity will respond slowly [15]. Thermal Diffusivity of PVC (7.8E-6 m^2/s) [16], this is a low Thermal Diffusivity meaning the material heats up slowly. The equation for this value is: =k/pCp

1. a= thermal diffusivity
2. k= material conductivity
3. p=density of material
4. Cp=specific heat of material

k. Aesthetics, Appearance, and Finish

i. The device should not be distracting to the user.

ii. The final product should be neat and blend in with surrounding equipment.

iii. All edges should be smooth and not pose a threat to users operating the device.

2. Product Characteristics

a. Quantity:

. Only one device will be manufactured for the client

. The device should be replicable in order to produce additional products if necessary or to potentially be mass produced.

b. Target Product Cost:

i. The target budget is to remain under a total of $100 for the final cost of the device.

ii. The allocated budget for development is $300.

iii. The team should use previously purchased materials to keep costs low and reduce waste, however, the team should present the final total price to reflect the total cost if the device is to be replicated.

3. Miscellaneous

a. Standards and Specifications

. All aspects of the device's design must comply with the many guidelines provided by the CDC for biosafety level 1 laboratories [8].

. The device should follow all guidance outlined in the FDA's "Chemical, Metals, Natural Toxins & Pesticides Guidance Documents & Regulations" to ensure safety and producibility should the device be reproduced [17].

. The following standards are to be referenced and used as guidelines throughout the development and implementation electrical systems designs [18].

01 Standard: Quality Management System.

001 Standard: Environmental Management System.

IC Standard: System and Organisation Controls

001 Standard: Information Security Management.

001 Standard: Occupational Health and Safety Management System.

002 Standard: Complaint Management Systems

DPR Standard: General Data Protection Regulation

b. Customer

i. While the team's client has a sole interest in the design, there is a potential for a more broad potential application of our design. If fabrication methods can be simplified and streamlined, it is likely that many universities and budget-aware labs would be keen to utilize our low-cost solution to the problem of motorizing and automating manual microscopes.

c. Patient-Related Concerns

i. The device should not inflict any danger to the surrounding users and equipment

ii. This device should be capable of undergoing regular maintenance and cleaning with harsh chemicals [8].

iii. No paper, cardboard, or other organic materials should be utilized in the final design.

d. Competition

i. The OpenFlexture project is an open-sourced, 3-D printable microscope that can be created and constructed for approximately $200, with multiple stages available to add motorized and automated functionality [19].

ii. One example of market-available motorized stages is Zaber's ASR series motorized XY microscope stages [20].

1. While these are functional, accurate to within 12 μm, and available, they do not meet client criteria due to cost and the way they interact with the microscope.

iii. Detailed in a 2017 article, a group of German-based scientists created an automated, motorized, 3-D printed inverted fluorescence microscope. The article includes all necessary CAD and software files for construction, as well as a step-by-step instruction manual to aid users in building their device [21].

References:

[1] "LBNL Electrical Safety Manual.pdf." Accessed: Sep. 22, 2023. [Online]. Available: https://www2.lbl.gov/ehs/pub3000/CH08/LBNL%20Electrical%20Safety%20Manual.pdf
[2] "ISO 7010 - M006, Disconnect mains plug from electrical outlet." https://www.iso.org/obp/ui#iso:grs:7010:M006 (accessed Sep. 22, 2023).
[3] "IEC 60417 - 5032, Alternating current." https://www.iso.org/obp/ui#iec:grs:60417:5032 (accessed Sep. 22, 2023).
[4] "ISO 7000 - 1641, Operator's manual; operating instructions." https://www.iso.org/obp/ui#iso:grs:7000:1641 (accessed Sep. 22, 2023).
[5] R. Pieper, S. Schini, and J. Cohn, "BME 400: Biomedical Engineering Design".
[6] "Nema 17 Stepper Motor L=40mm Gear Ratio 100:1 MG Series Planetary Gearbox - 17HS15-1584S-MG100|STEPPERONLINE." https://www.omc-stepperonline.com/nema-17-stepper-motor-l-40mm-gear-ratio-100-1-mg-series-planetary-gearbox-17hs15-1584s-mg100 (accessed Sep. 22, 2023).
[7] "download.pdf." Accessed: Sep. 22, 2023. [Online]. Available: https://www.fda.gov/media/73912/download
[8] "Biosafety in Microbiological and Biomedical Laboratories (BMBL) 6th Edition | CDC Laboratory Portal | CDC," Feb. 03, 2021. https://www.cdc.gov/labs/BMBL.html (accessed Sep. 20, 2023).
[9] M. L. Bayot and K. C. King, "Biohazard Levels," in *StatPearls*, Treasure Island (FL): StatPearls Publishing, 2023. Accessed: Sep. 20, 2023. [Online]. Available: http://www.ncbi.nlm.nih.gov/books/NBK535351/
[10] "FDM vs. FFF: Differences and Comparison | Xometry." https://www.xometry.com/resources/3d-printing/fdm-vs-fff-3d-printing/ (accessed Sep. 20, 2023).
[11] "3D Print Guide – UW Makerspace – UW–Madison." https://making.engr.wisc.edu/3d-printing-the-makerspace/ (accessed Sep. 20, 2023).
[12] "Laser Cutters," *UW Makerspace*. https://making.engr.wisc.edu/laser-cutters/ (accessed Sep. 20, 2023).
[13] "Electronics – UW Makerspace – UW–Madison." https://making.engr.wisc.edu/electronics/ (accessed Sep. 20, 2023).
[14] "Experimental tests to predict plastic gears' lifetime | Gear Solutions Magazine Your Resource to the Gear Industry," Dec. 15, 2019. https://gearsolutions.com/features/experimental-tests-to-predict-plastic-gears-lifetime/ (accessed Sep. 22, 2023).
[15] "Thermal Diffusivity | Definition | nuclear-power.com," *Nuclear Power*. https://www.nuclear-power.com/nuclear-engineering/heat-transfer/thermal-conduction/heat-conduction-equation/thermal-diffusivity/ (accessed Sep. 22, 2023).
[16] E. B. Ettah, J. G. Egbe, S. A. Takim, U. P. Akpan, and E. B. Oyom, "Investigation of the Thermal Conductivity of Polyvinyl Chloride (Pvc) Ceiling Material Produced In Epz Calabar, For Application Tropical Climate Zones".
[17] C. for F. S. and A. Nutrition, "Chemical, Metals, Natural Toxins & Pesticides Guidance Documents & Regulations," *FDA*, Jun. 01, 2023. https://www.fda.gov/food/guidance-documents-regulatory-information-topic-food-and-dietary-supplements/chemical-metals-natural-toxins-pesticides-guidance-documents-regulations (accessed Sep. 22, 2023).
[18] "ISO Certification for Electrical and Electronic | ISO 9001, 14001, 45001," *SIS Certifications*. https://www.siscertifications.com/electrical-and-electronic/ (accessed Sep. 22, 2023).
[19] "The OpenFlexure project." https://openflexure.org/ (accessed Sep. 21, 2023).
[20] "ASR Series - Motorized Microscope Stages, XY - Zaber." https://www.zaber.com/products/scanning-microscope-stages/ASR (accessed Sep. 21, 2023).
[21] D. Schneidereit, L. Kraus, J. C. Meier, O. Friedrich, and D. F. Gilbert, "Step-by-step guide to building an inexpensive 3D printed motorized positioning stage for automated high-content screening microscopy," *Biosens. Bioelectron.*, vol. 92, pp. 472–481, Jun. 2017, doi: 10.1016/j.bios.2016.10.078.

9/28/2023 Design Matrix

Title: Design Matrix

Date: 9/28/2023

Content by: Sawyer Bussey

Present: Sawyer Bussey

Goals: Begin the Design matrix

Content:

Mechanical Integration:

Mechanical Integration is based on how efficiently the device interacts with the structure and mechanical components of the Microscope. It takes into account the limited surface area of the microscope as well as the restricted screw thread hole locations for mounting the device. This criteria evaluates the *Size*, *Weight*, *Ergonomics* and *Spatial Configuration* sections of the PDS (Appendix 1).

Mechanical Integration (score justification):

The Spur Gear design received the highest score due to the simplicity of the design as well as the relatively low interference with the stage and the area under the stage. Spur gears are very simple to work with and will be easy to mount on the cylindrical control knobs of the microscope. The Worm gear design scored slightly less than the Spur Gear design because worm gears are known to generate more heat when interlocking with other gears and will therefore have a lower efficiency, some issues were also foreseen with combining both spur gears and worm gears in the Worm Gear design. The Linear Rail Design scored the lowest because of the possible interference it could have with the stage and other components of the microscope as it bypasses the manual control knobs and moves the stage directly which may cause it to limit the stage's movement or accuracy.

Design Categories (Weight)	**Design 1: Spur Gears**		**Design 2: Worm Drive**		**Design 3: Linear Rails**	
Performance (30)	4/5	24	3/5	18	5/5	30
Cost (20)	4/4	16	4/5	16	3/5	12
Mechanical Integration (17.5)	5/5	15	4/5	12	2/5	6
Ease of Fabrication (15)	4/5	12	4/5	12	3/5	9
Size (12.5)	4/5	8	5/5	10	5/5	10
Safety (5)	4/5	8	4/5	8	5/5	10
Total Points:	83		76		77	

Action items: Needs to be finished, I need to finish my sections.

10/10/2023 Preliminary Presentation

SAWYER BUSSEY - Oct 13, 2023, 10:54 PM CDT

Download

Motorized_Microscope-Preliminary_Presentation-9_29_2023_1_.pdf (1.02 MB)

Title: Preliminary Presentation

Date: 10/10/2023

Content by: Sawyer Bussey

Present: Sawyer Bussey

Goals: Complete Preliminary Presentation

Content:

Product Design Specifications

Performance

- The device should adjust the stage in the x and y directions
- The device should be controllable by arrow keys or integrated joystick
- Accuracy to 1µm
- Withstand many rotations

Cost

- Should be affordable
- Total Cost Under $100

Materials

- 3D Printed and laser cut
- Gear materials should be able to withstand friction and heat
- Material should not deform under torque or pressure

Size/ Mechanical Integration

- Should not interfere with movement of microscope stage
- Preferably attached to the microscope
- Take up little to no space next to microscope

Spur Gear Design

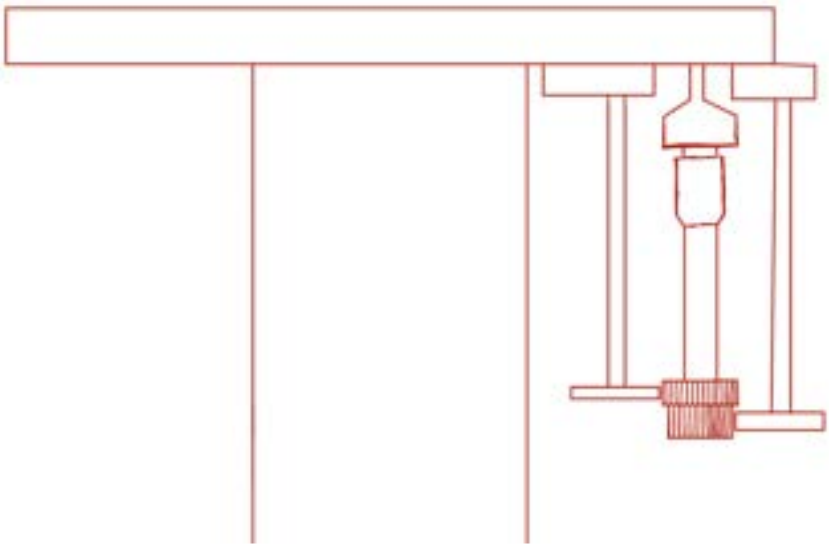

- Attaches directly to the stage
- Reduce Size of device and space it occupies on the countertop
- One motor per control knob
- Spur Gears attached to control knobs
- Interacts with control surface already present

Figure 6: A front view of the Spur Gear Design

Worm Drive Design

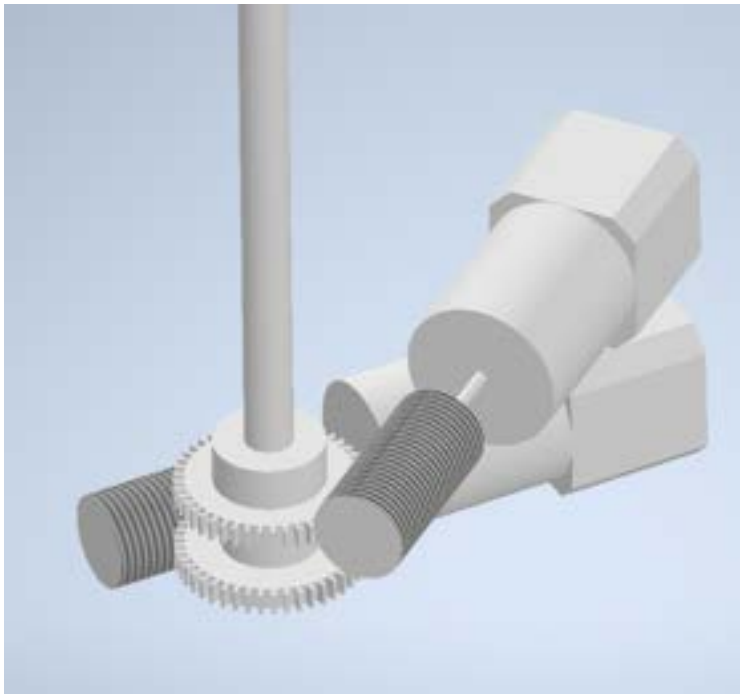

- Tower containing stacked stepper motors-reduce space
- Worm gears extend from motors to spur gears mounted on control knobs
- Includes screw thread locations in 3d print file-stability/strength

Figure 7: The Worm Gear Design.

10/05/2023 Week 4 Progress Report

SAWYER BUSSEY - Oct 13, 2023, 10:59 PM CDT

Download

Motorized_Microscope-Progress_Report_4-_9_27-10_5_1_.pdf (94.3 kB)

Microscope Low Cost Motorized Stage

Client: Dr. John Puccinelli

Advisor: Dr. Joshua Brockman

Team Members: Tyler Haupert, Julia Salita, Nicholas Symons, Sawyer Bussey, Zhaoyun Tang

Name	Email	Role
Tyler Haupert	thaupert@wisc.edu	Team Leader
Julia Salita	jsalita@wisc.edu	BSAC
Nicholas Symons	nsymons@wisc.edu	Communication
Sawyer Bussey	bussey2@wisc.edu	BWIG
Zhaoyun Tang	ztang259@wisc.edu	BPAG

Reporting Period: September 29th, 2023 - October 5th, 2023

Problem Statement:

The UW-Madison BME teaching lab currently houses two inverted fluorescent microscopes. While these contemporary pieces of equipment are functional in their current state, they leave a great deal to be desired when it comes to laboratory efficiency. Motorized alternatives do exist, however, cost continues to be a factor limiting the exposure students have to this technology. With a working budget of approximately $100, our team seeks to revolutionize the precision and automation of these microscopes through the creation of a novel microscope stage moving device. This design will allow for sequential, automated imaging of coordinate-based locations on slides. The creation of this device will increase the consistency of measurements, reduce the amount of time spent during data collection, and lower the learning curve for operating this equipment. To remain competitive, design prototypes should be automated in both the X and Y directions and retain high precision and accuracy in translations (1 μm resolution).

Brief Status Update:

This week the team has been working on the preliminary presentation which will be presented on Friday (10/06/2023). On Wednesday (10/04/2023) the team had a zoom meeting with our client, Dr. Puccinelli, and a team meeting to practice presenting the preliminary presentation.

Summary of Weekly Team Member Design Accomplishments:

- Team:
    - This week the team met with Dr. Brockman on Friday. We went over our notebooks with him and discussed some of our preliminary designs. Following the submission of our design matrix the team began working on the preliminary presentation. As of now, this presentation is essentially finished, with minor tweaking and references left to be completed prior to presentations on friday.
    - In addition to work related to the preliminary presentation, the team also did some work this week to add to the design matrix. We met with the client and discussed our designs, our evaluation criteria, and future directions for the semester.
- Tyler Haupert (Team Leader):
    - Created slides to present during the preliminary presentation
    - Attended client meeting on 10/4 to discuss designs, access to materials in ecb, and talk about future directions.
    - Independently practiced slides in anticipation of presentation on friday
    - I would like to note that I was sick this week. I wasn't able to be as active in team activities this week but the rest of the team did a great job stepping up and getting things done in my absence.
- Julia Salita (BSAC):
    - Attended 2nd BSAC meeting
        - Setting realistic client expectations
        - Some of our projects have aspects that none of us have much experience in, where to find resources
    - Worked on the preliminary presentation and divided up sections of the presentation to present.
    - Practiced my part of the presentation and got feedback from other team members and outside views (roommates and friends)
    - Attended client meeting and took paper notes
        - Went over designs and clarified some confusion
        - Received a schematic for the microscope stage and adjustment knobs
- Nick Symons (Communicator):
    - Worked on slides for preliminary presentation
    - Practiced presenting slides individually and with the rest of the group
    - Attended client meeting to discuss our designs and how we might improve the way we present them
        - The main points were to include clearer labels, include some quantitative justification for why they scored the way that they did, and include better descriptions of how each design would work

- Sawyer Bussey (BWIG):
    - Updated lab archives
    - Worked on preliminary design presentation
    - Practiced slides for preliminary presentation
    - Received feedback from junior mentors on how to improve presentation
    - Attended group meeting to go through presentation together
- Zhaoyun Tang (BPAG):
    - Work on slides on the preliminary presentation
    - Practice presenting the preliminary presentation
    - Attended group meeting to practice the presentation with the group

Activities:

Date	Name	Task	Time (hours)	Weekly Total	Semester Total
9/27-10/5	Team	- Advisor Meeting - Team Meeting (Mon) - Team Meeting (Wed) - Client Meeting (Wed)	- 2 - 1 - 1 - 0.5	4.5	14
9/27 10/5	Tyler	- Finalize design matrix - Preliminary presentation - Presentation practice - progress report	- 2 - 1 -0.5 -0.5	4	19.75
	Zhaoyun	- Work on preliminary presentation slides - Practice presenting individually -Updating Lab Archive -Progress report	- 0.5 - 1 -0.5 -0.25	2.25	12.25
	Nick	• Individual work on prelim. pres. slides (writing and speaking practice) • Updating LabArchives with design matrix and client meeting notes • Progress report • Making rough CAD model for second design on design matrix	• 2 • 0.5 • 0.5 • 0.25	3	12.5
10/1 10/3	Sawyer	- work on preliminary presentation -meeting for presentation practice -Updating lab archives -redesign worm gear drawing for better clarity	-1 -1 -1 -.5	3.5	14.25
9/29 10/2 10/3	Julia	- design matrix - Updated labarchives -preliminary presentation -preliminary presentation	-2 hr -1hr -1hr -1hr	5	19

Weekly/Ongoing Difficulties:

Upcoming Team and Individual Goals

- Tyler Haupert:
    - Aside from finalizing and presenting our slides tomorrow, I think the biggest upcoming goal is the creation and completion of the preliminary report. This document is due on Wednesday, 10/11. I have two exams this day, so I think it would be to my benefit to put a lot of work into this document this weekend so I have less to do closer to the due date.
- Nick Symons:
    - Complete preliminary presentation by cleaning up slides and practicing my part
    - Begin preliminary report
    - Start prototyping our design (and hopefully get into the lab so we can get a good look at the microscopes
- Sawyer Bussey:
    - Fish up practice on preliminary presentation
    - Begin preliminary report
    - Begin refinement for chosen design

- Zhaoyun Tang:
    - Complete the preliminary presentation
    - Practice more on presenting to prepare for Friday 10/06/2023
    - Work on the preliminary report
    - Start polishing the design we decided on
- Julia Salita:
    - Finish adding all personal contributions, information, and designs to Lab Archives
    - Turn in and complete preliminary presentation
    - Start finalizing design
    - Additional fabrication research to start a fabrication protocol
    - Work on and complete preliminary report

Project Schedule/Timeline:

Project Goal	Deadline	Team Assigned	Progress	Completed
Product Design Specifications	9/22	All	100%	Yes
Design Matrix	9/29	All	100%	No
Preliminary Presentations	10/6	All	95%	No
Preliminary Deliverables	10/11	All	0%	No
Show and Tell	11/3	All	0%	No
Poster Presentations	12/8	All	0%	No

Final Deliverables	12/13	All	0%	No

Expenses:

- No Purchases as of 9/28

10/12/2023 Week 5 Progress Report

Microscope Low Cost Motorized Stage

Client: Dr. John Puccinelli

Advisor: Dr. Joshua Brockman

Team Members: Tyler Haupert, Julia Salita, Nicholas Symons, Sawyer Bussey, Zhaoyun Tang

Name	Email	Role
Tyler Haupert	thaupert@wisc.edu	Team Leader
Julia Salita	jsalita@wisc.edu	BSAC
Nicholas Symons	nsymons@wisc.edu	Communication
Sawyer Bussey	bussey2@wisc.edu	BWIG
Zhaoyun Tang	ztang259@wisc.edu	BPAG

Reporting Period: October 6th, 2023 - October 12th, 2023

Problem Statement:

The UW-Madison BME teaching lab currently houses two inverted fluorescent microscopes. While these contemporary pieces of equipment are functional in their current state, they leave a great deal to be desired when it comes to laboratory efficiency. Motorized alternatives do exist, however, cost continues to be a factor limiting the exposure students have to this technology. With a working budget of approximately $100, our team seeks to revolutionize the precision and automation of these microscopes through the creation of a novel microscope stage moving device. This design will allow for sequential, automated imaging of coordinate-based locations on slides. The creation of this device will increase the consistency of measurements, reduce the amount of time spent during data collection, and lower the learning curve for operating this equipment. To remain competitive, design prototypes should be automated in both the X and Y directions and retain high precision and accuracy in translations (1 μm resolution).

Brief Status Update:

This week the primary objective of the team was to create and finish the preliminary report. In addition to this task, the team also began the steps of prototyping by establishing fabrication methods and making decisions on material and supplier choices. The team was finally able to get hands on previous semester prototypes, and looks forward to putting a physical design together (hopefully before show and tell).

Summary of Weekly Team Member Design Accomplishments:

- Team:
    - This week the team met on friday to deliver our preliminary presentation. The following day we created our preliminary report. This report was due yesterday, 10/11, but due to extenuating circumstances within our group we were granted a 2 day extension. The report will be finalized and sent out before 11:59 pm on 10/13. The team's efforts are now focused on fabrication, with hopes to have our first prototype built prior to show and tell on 11/3.
- Tyler Haupert (Team Leader):
    - Updated LabArchives to include recent contributions, research, and design edits.
    - Finalized and presented the Preliminary Presentation.
        - Questions following the presentation included:
            - What material do we plan to make the drive shaft out of? And what factors were considered while making this decision?
            - The manual knob of microscopes have some give to them. How do you plan to account for this to achieve the desired resolution?
    - Worked on my assigned sections of the preliminary report, and well as doing whole-document editing and formatting
        - Background
        - Conclusion
        - Abstract
        - Testing methods
- Julia Salita (BSAC):
    - Finished adding all personal contributions, information, and designs to Lab Archives
    - Completed, practiced and gave preliminary presentation
    - Additional fabrication research to start a fabrication protocol
        - Used same resources I already had just went deeper into what I found
    - Worked on preliminary report
        - Started some of the design matrix section then switched to the discussion section
- Nick Symons (Communicator):
    - Worked on preliminary report
        - Methods section: device fabrication and initial prototyping/testing sections
    - Updated LabArchives with findings about Inventor Gear generating tool, personal contributions section, and project files section.
    - Worked with previous design to see how it functions and how we might be able to use those materials to make our own design.

- Sawyer Bussey (BWIG):
    - Worked on Preliminary report
        - Materials section
    - Updated lab archives with research on materials for components of device
    - Went to ECB to view microscope
    - Looked at previous design to understand what materials were used in order to improve upon them
- Zhaoyun Tang (BPAG):
    - Worked on the Preliminary Report
    - Recorded some things in the online notebook
    - Filled out Weekly Progress Report

Activities:

Date	Name	Task	Time (hours)	Weekly Total	Semester Total
10/6-10/12	Team	- Prelim Presentation - Team Meeting (mon)	- 2 - 1	3	17
10/9	Tyler	- Prelim Report - LabArchives - Team Meeting notes - Created and filled out progress report	- 4 - 1 - 1 - 1	6	25.75
10/9-10/12	Zhaoyun	- Preliminary Report -LabArchives -Progress Report	- 4 -1 -0.5		17.75
	Nick	-Preliminary report work(fabrication and testing sections) -Research -Updating LabArchives	- 2.5 -0.5 -1	4	16.5
10/9 10/12	Sawyer	- Preliminary Report Materials Research and Preliminary Report	-1 -2	3	17.25
10/9 10/11 10/12	Julia	- preliminary report - updated lab archives -plan on doing more throughout the day on 10/12 it will just be after the progress report	- 0.75 -1.25	2	21

Weekly/Ongoing Difficulties:

Current difficulties this week included schedule issues revolving around midterms and the preliminary deliverables due date. Almost every member of the team had multiple exams on Wednesday. Thankfully, Dr. Brockman was willing to grant the team a 2-day extension, which the team feels comfortable with.

Upcoming Team and Individual Goals

- Tyler Haupert:
    - Finalize my sections of the preliminary report
    - Review and edit entire preliminary report document

    - Start fabrication, with short term goals or finalizing cad files for motor mounting pieces and gear dimensions.
- Nick Symons:
    - Begin working on some form of a prototype
    - Get measurements of the screw holes on the microscope and start designing a bracket that the motors can attach to.
- Sawyer Bussey:
    - Finish Materials section of preliminary report
    - Utilize materials research to begin fabrication and search for materials

- Zhaoyun Tang:
    - Think about fabrication and prototyping
    - Work on LabArchives
    - Help complete the spur gear design
- Julia Salita:
    - Attend Oct 13, 2023 BSAC meeting
    - Choose a part of the design to fabricate/ focus on and create a more indepth CAD file or do research/look at past semesters code and electrical circuitry.

Project Schedule/Timeline:

Project Goal	Deadline	Team Assigned	Progress	Completed
Product Design Specifications	9/22	All	100%	Yes
Design Matrix	9/29	All	100%	Yes
Preliminary Presentations	10/6	All	100%	Yes
Preliminary Deliverables	10/11	All	80%	Yes
Show and Tell	11/3	All	0%	No
Poster Presentations	12/8	All	0%	No
Final Deliverables	12/13	All	0%	No

Expenses:

- No Purchases as of 9/28
- Team received contact from client regarding access to MakerSpace funds of $100

Progress report 6

SAWYER BUSSEY - Dec 15, 2023, 6:53 PM CST

Download

Motorized_Microscope-Progress_Report_6-_10_13-10_19_1_.pdf (93 kB)

Progress report 7

SAWYER BUSSEY - Dec 15, 2023, 6:54 PM CST

Download

Motorized_Microscope-Progress_Report_7-_10_20-10_26_2_.pdf (246 kB)

Progress report 8

SAWYER BUSSEY - Dec 15, 2023, 6:54 PM CST

Download

Motorized_Microscope-Progress_Report_8-_10_27-11_2_1_.pdf (383 kB)

Progress report 9

SAWYER BUSSEY - Dec 15, 2023, 6:54 PM CST

Download

Motorized_Microscope-Progress_Report_9-_11_3-11_9_1_.pdf (115 kB)

10/13/2023 Preliminary Report

Title: Preliminary Report

Date: 10/13/2023

Content by: Sawyer Bussey

Present: Sawyer Bussey

Goals: Complete Preliminary Report

Content:

The low cost motorized stage adjustment device consists of several components that will be created from several different materials. The main components that are involved in this design are the gears mounted on the microscope manual control knobs, the gear shafts from both stepper motors to both gears on the control knobs, the housing unit for the stepper motors, an arduino board and stepper motor driver, as well as screws to secure the device to the underside of the microscope stage.

The material of the stepper motor casing needed to be something that would be mildly resistant to heat due to the possibility of stepper motors running at over 100°C [12]. However, this temperature is usually from constant use within 3d printers, and the device won't be quite as active and therefore will result in a lower temperature, but a material with a higher softening point is still necessary to preserve structural integrity. Standard PLA filament begins to soften and warp at around 50°C which will decrease the strength of the casing, especially if it is supporting the hanging weight of the stepper motor on the underside of the microscope stage [13]. Therefore, the material that should be utilized due to its physical strength and heat resistance is Polycarbonate. PC has the ability to withstand temperatures of up to 110°C without warping which exceeds the temperature that the stepper motors would be able to reach at maximum performance [16]. At the moment, the quantity of Polycarbonate listed below is purely theoretical, and when fabrication begins this value may go up or down.

Previous Groups have utilized laser cut Acrylic for their gears, however, despite the benefits of acrylic as a material, the makerspace laser cutter only permits a certain width of gear to be cut. This is because too thick of certain materials begin to have issues on the laser cutter as it is not able to effectively cut through them past a certain depth, in the case of acrylic, it is limited to a depth of a ¼". Instead, the decision has been made to make our Gears out of Nylon filament. Using Nylon filament allows the 3d printing of the gears, which in turn enables the gears to be much thicker. Thicker gears allow for more surface area to make contact, and this will overall improve the efficiency and performance of the device. Nylon is also a very heat resistant material, meaning it will begin to warp at higher temperatures than PLA or Tough PLA would. This heat resistant property stays true to the requirements set by the PDS (Appendix 9.1) Nylon has the ability to withstand 160°C without warping, which may be useful due to friction between the gears. Also, Nylon has the benefit of not requiring lubricant which is ideal for continuous use and low maintenance [15].

There are also a few other components that the team won't be manufacturing but they will still be included in our design. The first of which includes screws that will be used to attach the device to the underside of the stage via the available screw holes on the microscope. The screws listed below are roughly the size of the necessary screws needed to complete this project, so the price will be very similar, however the team was not able to get precise measurements using a dial caliper due to complications with the team lab as well as not having access to the teaching lab. The arduino board, arduino breadboard, stepper motor driver, and the stepper motor have all been passed into the current team's inheritance from previous groups as listed below. The stepper motors will enable rotation of the fabricated gears. The bread board, arduino board, and stepper motor driver will allow for the application of the software to our stepper motors.

Table 2: Materials and costs

Component	**Material Type**	**Quantity**	**Price/Unit**
Stepper motor casing	Polycarbonate	150 Grams	$.12 per Gram $18
Control Knob spur gears	Nylon	100	$15

Screws	#6-32 ¼” UNC Screw	8 Pack	$1.64
Arduino Board	Arduino Board	1	$10(previous group)
Stepper Motor	Nema 17 Stepper motors	2	$28(previous group)
Bread Board	Bread Board	1	$3(previous group)
Stepper motor driver	Stepper Motor Driver Nema TB6600 boards	1	$19.96(Previous group)
			Total: $95.6

Conclusions/action items: None

SAWYER BUSSEY - Oct 13, 2023, 11:25 PM CDT

Download

Motorized_Microscope-Preliminary_Report-10_13_2023.pdf (2.74 MB)

Contribution to final report- 12/14/2023

SAWYER BUSSEY - Dec 15, 2023, 6:45 PM CST

Title: Contributions to Final Report

Date: 12/14/2023

Content by: Sawyer Bussey

Present: Sawyer Bussey

Content:

Design Research

The BME Teaching Lab at UW-Madison houses, amongst many other pieces of equipment, two inverted fluorescence microscopes-one of which can be seen in Figure 3. The “inverted” in the name is due to the flipped arrangement of certain parts of the microscope relative to what is normally seen. These microscopes house an objective lens below the stage, with a condenser and light source located above the stage [4]. In addition to an altered arrangement of componentry, inverted fluorescence microscopes also have a unique imaging mechanism that utilizes fluorescent dyes. Dyes are placed within the sample by researchers and excited through the use of a halogen lamp as well as LEDs and lasers. Differences between input and output emission are used to generate high resolution imagery of things like living cells and tissue culture [5].

Figure 3: Nikon TI-U inverted fluorescence microscope used in the BME Teaching Lab [6]

This variety of microscope has become very popular in the scientific community, specifically amongst researchers as well as in general laboratory use across a variety of categories of science. This points to the significance of creating a device that can modify microscopes without previously integrated mechanized systems at a low cost; many in the scientific community would benefit from the reduced costs of equipment that such a device would provide.

As research was conducted regarding the efficiency and accuracy of the device, it was discovered that gear meshing and the reduction of deflection should be a very high priority goal during the production of the device. Gear meshing can be described as the interaction between the teeth of two gears, as one tooth from one gear is inserted in between two teeth of another gear, they become meshed. Solid and consistent meshing is what makes an accurate and reliable gear system, and this consistency is why gears have been chosen to create a relationship between the motors and control knobs despite alternative solutions such as belts being available. However, consistent gear meshing can be difficult to accomplish, especially amongst gear systems with more than 2 gears. As research was conducted to determine the best gear setup for the design, there were two major factors that influenced the final decision, size and gear functionality. This can be seen in more detail in the PDS (Appendix A). It was already established from

our Client's design criteria that the device as a whole should not take up excessive space on the countertop where the microscope is located. Research was also conducted to determine common pitfalls that occur when working with gears, which were determined to be gear meshing, gear lockup, and gear deflection. Originally, this year's team met with a Mechanical Engineering professor, Doctor Christopher Westphal, to discuss gearing as well as the designs that were being developed at that time in regards to the gear setup. Initially, a three year design was going to be used as it was thought it would reduce the size of the overall design by having smaller gears. However, Doctor Westphal highlighted that a three gear design, especially with 3D printed gears, was prone to gear lockup. Gear lockup would greatly reduce the accuracy and efficiency of the device, so a two gear system was used instead. As previously mentioned, the ability of the gears to mesh is also crucial for an efficient and effective gear system that prevents backlash and loss of motion. Figure *4* below is a diagram that shows an example of effective gear meshing with minimal backlash. Backlash can be described as the effect that unfilled space between two meshing gears has on the loss of motion in a gear system[7]. This contributes to a loss of motion in the overall device. The effects of the loss of motion are highlighted in the testing results in *Section VI.*

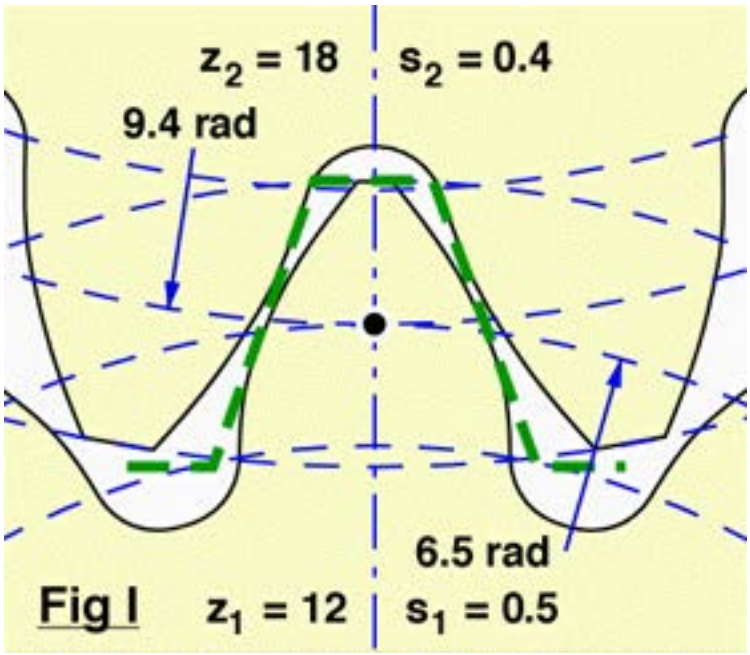

Figure 4: showcase of gear meshing and backlash [8]

Design History

The Low Cost Motorized Microscope stage design has had several iterations prior to our assignment to this project. Each of these designs has made steps towards creating a consistently functional final project, but none have done so to completion. Previous groups have taken several different approaches to solving the issue of integration motorization into the design of the microscope. Each of the previous designs, as well as this year's final Prototype have used the already existing manual control knobs as the medium for manipulation of the stage. Each team has also been faced with producing a solution to one of the more difficult aspects of this project to overcome, that being the Y-axis travel of the stage. As the stage is moved by the manual control knobs in the X-axis direction, the manual control knob shaft that hangs from the stage is not moved, however, when the stage is moved in the Y-axis direction, the manual control knob moves with the stage. Since the desired outcome of this project is to create a device that manipulates the stage in both the X and Y directions, the movement of the manual control knobs increases the complexity of reaching our goal. Due to the movement of the control surfaces (the manual control knobs), a solution must be created in order to keep the device's movement relative to the control knobs.

Workarounds that have been developed by previous groups include a linear rail system to allow the device to slide along the side of the microscope as the stage moves in the Y direction, as well as a housing unit that hangs from the underside of the stage

that acts to support each component of the device. Previous groups have encountered issues with both of these methods. Both are shown below in Figure 5 and Figure 6.

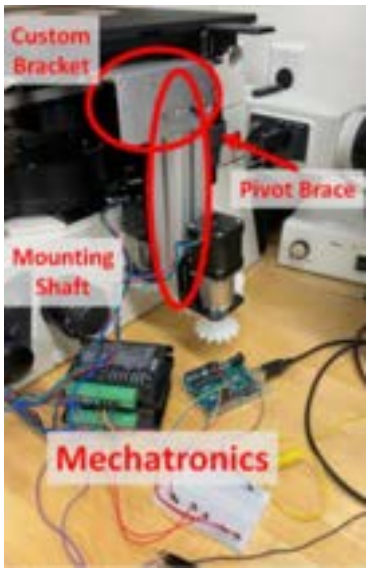

Figure 5: Fall 2020- Spring 2021 stage-mounted final design

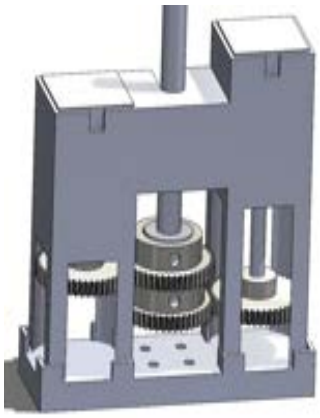

Figure 7: Spur Gear Design

The spur gear design is attached directly under the stage and interacts with the existing control knob. In this design each motor is directly connected to a spur gear. When it rotates, its horizontal alignment and connection with a spur gear would move the control knob to turn, thereby moving the stage in the X and Y direction. The main advantage of this design is that it reduces the size of the device and the space it occupies on the countertop.

Worm Drive Design

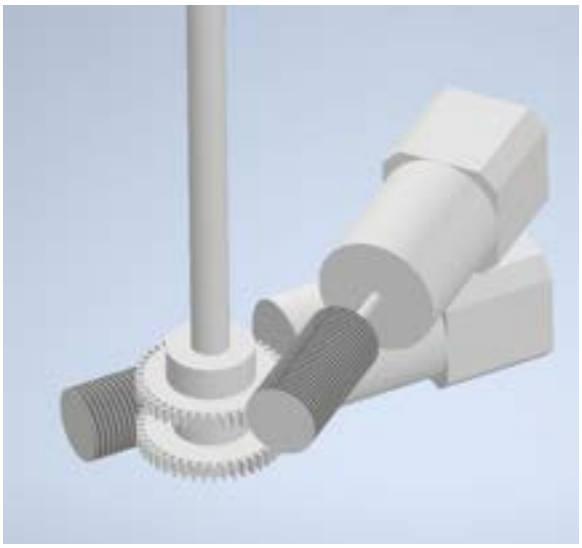

Figure 8: Worm Drive Design

The worm drive design interfaces with the existing manual control knob in order to move the stage. In this design, the manual knob will have spur gears added so that the worm gears can turn the knob. The worm gears will be placed on top of one another to reduce the amount of space used and will be angled so they can easily mesh with their respective spur gear.

Linear Rails Design

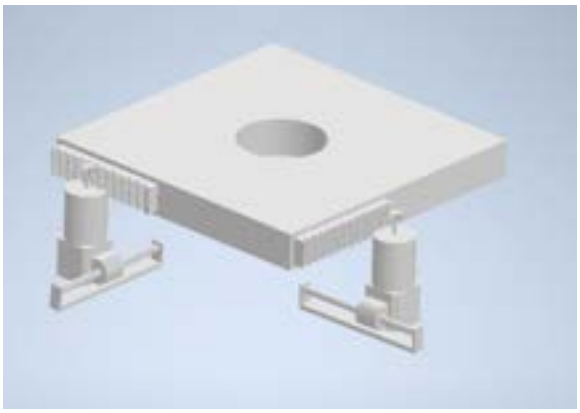

Figure 9: Linear Rail Design

The last design has many major differences to the previous designs. The linear rail design uses stepper motors to directly move the stage. It accomplishes this by having a spur gear on each stepper motor and linear gears attached to the stage. The spur gears can then move the stage by moving the linear gears. In order to keep the spur gear in contact with its linear gear when the stage is moving, there are linear rails attached to each stepper motor. These linear rails let the motor freely move with the stage.

Progress report 10

SAWYER BUSSEY - Dec 15, 2023, 6:55 PM CST

Download

Motorized_Microscope-Progress_Report_10-_11_9-11_16_1_.pdf (115 kB)

Progress report 11

SAWYER BUSSEY - Dec 15, 2023, 6:56 PM CST

Download

Motorized_Microscope-Progress_Report_11-11_17-11_30_1_.pdf (3.18 MB)

Progress report 12

SAWYER BUSSEY - Dec 15, 2023, 6:56 PM CST

Download

Motorized_Microscope-Progress_Report_12-12_1-12_6_1_.pdf (528 kB)

9/29/2023 Worm gear research and design

SAWYER BUSSEY - Sep 28, 2023, 10:24 PM CDT

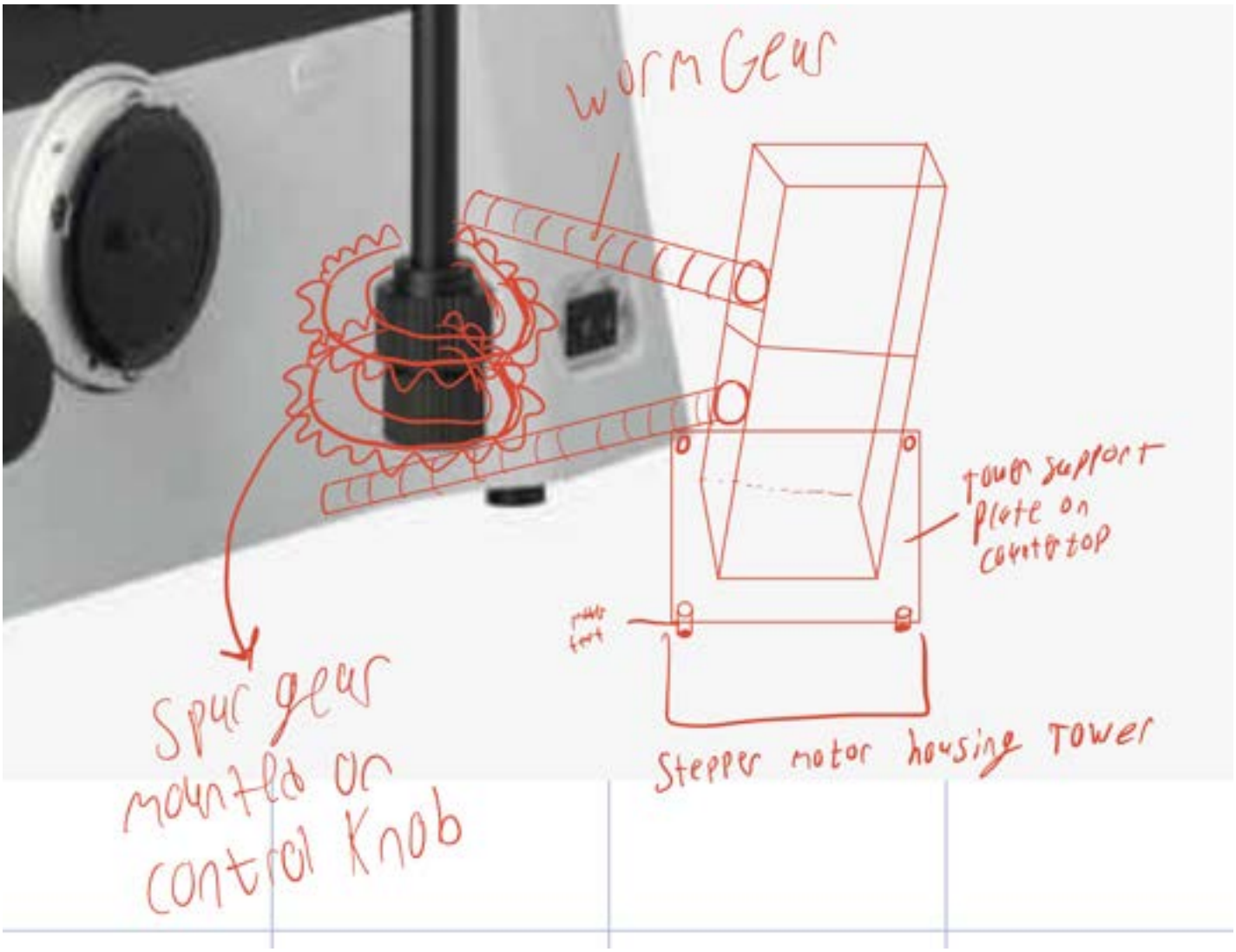

Title: Worm Gear Research and Design

Date: 9/29/2023

Content by: Sawyer Bussey

Present: Sawyer Bussey

Goals: Create a potential design for the design matrix and gain research about securing the device as well as information about worm drive system.

Content:

What is a worm gear exactly?
A worm gear is a cylindrical rod that has a thread cut into it, the direction of the rod is perpendicular to the teeth of the spur gear that it would line up with so that the threads can interlock.
The design team from two semesters ago (Spring 2022) utilized this design in their final design, and the team from the previous semester had this in their design matrix as a candidate.
Pros-

- Worm gears can help reduce space as they are skinnier and dont have quite as much surface area of a regular spur gear
- Worm gears are great at either reducing speed or increasing torque, seeing as we are not trying to rotate a super heavy load, the speed reduction can be very useful for us while we try to maintain a high level of accuracy
-

Cons-

- Last years group did not go with this design because the group from two semester's ago made theirs very large and I believe the previous group didn't go with this to try and preserve space, however I think it was mostly a design issue that it took so much space and not so much a fault of the worm gear.
- Previous groups used metallic worm gears in combination with plastic spur gears, may or may not require lubrication but I would imagine not since it is not metal on metal contact.
- Worm gears rely on a sliding mechanism and interaction between the teeth which results in more heat generation, this might not be a huge issue for us though because we aren't trying to have this do continuous intervals of rotation.

Research on stability and mounting

- We can include threaded inserts for screws within our designs, these allow for repeated screwing and unscrewing but take up more space and require thicker walls for 3d printing. This would help reduce warping of 3d printed material and mayu also help with assembly
- If we don't want to include the actual screw thread we can include a space for a cynidrical insert for a thread to be put in which may be stronger and more reliable than a plastic thread.
- Rubber feet are an alternative option to secure the design to the table to reduce movement from the torque of the motors. These could probably be attached to the design by leaving holes for them in designated spots on the design so that a purchased rubber stopper with a screw can be inserted. Adhesive may not be the best option for longevity but would be easier for assembly.

The group from two semesters ago that actually used the worm gear design had their design mounted oon a metal platform, but it does not appear that this design was attached to anything to secure it to the countertop to prevent it from moving. This could be a factor in the decreased accuracy of the device. Also, the metal plate is the same one that last year's group mounted their device to, this may be a question for the client as there is not a clear picture that illustrates the stability of this metal plate, or how the previous designs mounted to it.

Sources:

What is a worm gear

How to choose the

Conclusions/action items:

Obtained some good and useful information and created a rough design for the design matrix

References:

[1] "What determines worm gear efficiency, and is it really that low?" Accessed: Sep. 28, 2023. [Online]. Available: https://www.motioncontroltips.com/what-determines-worm-gear-efficiency-and-is-it-really-that-low/

[2] "Worm Gears | KHK Gear Manufacturer." Accessed: Sep. 28, 2023. [Online]. Available: https://khkgears.net/new/worm_gear.html

[3] T. Axsom, "How to Choose the Best Fasteners for 3D Printed Parts," Fictiv. Accessed: Sep. 28, 2023. [Online]. Available: https://www.fictiv.com/articles/how-to-choose-the-best-fasteners-for-3d-printed-parts

Research on Gears 9/14/2023

SAWYER BUSSEY - Sep 15, 2023, 1:34 PM CDT

Title: Research on Gears

Date: 9/14/2023

Content by: Sawyer Bussey

Present: Sawyer Bussey

Goals: Obtain information regarding the gear portion of the design

Content:

Previous groups utilized several different types of gears in order to transfer cyclic energy into the system of the microscope setup. Gears allow for very precise measuring of distance moved, which is very important for our project as it must be accurate to 10 micrometers.

Types of gears:

Worm Gear: The worm gear is a setup that combines a worm screw and a worm gear in order to achieve motion. This setup allows for a great amount of torque, which isn't super important unless the microscope's knobs are very difficult to turn. However, it also allows for quiet operation if maintained properly as well as very good energy transfer between screws, which elevates the efficiency of a device that uses this setup.

Spur Gears:

Spur gears are likely what everyone thinks of when they think about a gear setup. They are very reliable and will likely be much easier to do testing with as well as being easier to fabricate. Things like worm gears will likely have to be things that we order, but a spur gear is something that we could possibly design and 3d print ourselves due to it's simplicity.

Conclusions/action items:

-Obtained information on previous groups' methods of gearing

-Obtained information on different methods of gearing and why one may choose to use them.

Research on electrical components 9/14/2023

SAWYER BUSSEY - Sep 15, 2023, 1:44 PM CDT

Title: Research on electrical components

Date: 9/14/2023

Content by: Sawyer Bussey

Present: Sawyer Bussey

Goals: Obtain information on electrical components that can be used

Content:

Wire connectors that can be plugged in and unplugged may be useful if the device needs to be detached from the microscope. It may also be better for testing so that there is less damage done to wires and so that less splicing and wire jacket removal need to take place.

This device allows for easy connection to wires without having to cut either wire that is being connected.

Conclusions/action items:

Obtained information on different methods of connecting wires

9/21/2023 Gear Materials Research

SAWYER BUSSEY - Sep 22, 2023, 12:45 PM CDT

10/11/2023 Nylon Gears Research

SAWYER BUSSEY - Oct 13, 2023, 11:34 PM CDT

Title: Nylon Gears and Polycarbonate Research

Date: 10/12/2023

Content by: Sawyer Bussey

Present: Sawyer Bussey

Goals: Obtain research for the Preliminary Report

Content:

Nylon is tougher than PLA and Tough PLA and is also able to handle much higher temperatures without warping. PLA begins warping at around 60 degrees celsius while Nylon filament begins warping at 160 degrees. This is important to the design of the gears because the friction between them will cause heat and the torque applied to them will also be resisted more by the higher strength of the Nylon.

Polycarbonate should be used instead of PLA for the stepper motor casing because Stepper motors can run at upwards of 100 degrees Celsius which will be managed well by the 150 degree resistant PLA filament. This ensures that it won't lose any stability or structural capability due to heat which is especially important because the device will be hanging from the bottom of the microscope which will require increased stability.

Conclusions/action items:

10/27/2023 Fabrication and materials research

Title: Fabrication and Materials research

Date: 10/27/2023

Content by: Sawyer Bussey

Present: Sawyer Bussey

Goals: Obtain information on fabrication and materials that will be used.

Content:

Materials for mounting plate for underside of the stage

During our meeting with Dr. Kazyak he recommended that we use an aluminum mounting plate. This is because the underside of the microscope stage only has four screws in which we were planning on mounting our device to. However, since these screws are all in the same line of action and there are only four of them, we suspected that there would be issues with stability in the x direction along the stage. Dr. Kazyak recommended that we attach an aluminum mounting place. I believe that this will make the fabrication of the device easier as well as we will be able to design in CAD with the mounting member in mind. We will only have to worry about the securement of the aluminum mounting to the stage, and everything else can be attached to that. It is possible that we may need to drill our own threads into this aluminum mounting.

Gearshaft materials
Due to our device being mounted to the underside of the stage, there is a longer distance that we would need to cover in order to actually create the desired movement about the gear.

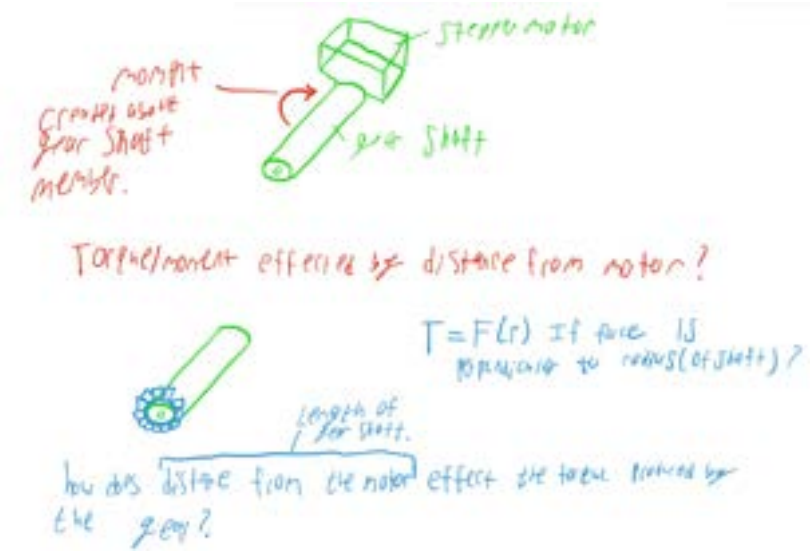

This is likely something that we will need to figure out with trial and error and will likely need to consult Dr. Kazyak further or another mechanical engineering professor when we reach this step of the device.

Research for securing member to make sure that the gears are in constant contact with each other and aren't "bumping" off each other. Dr. Kazyak recommended a bushing or a metal piece that would secure the location of the gear shaft in the x and y direction by attaching to the control knob rod. This securing member would have to allow rotation of the gearshaft. The specifics for

this piece will likely need to be decided when the actual drive shaft is constructed so that we know if the bumping is an issue or how severe the issue is.

Conclusions/action items:

Must continue this research, need to obtain measurements of stage section in order to purchase or fabricate

Gearing Research

SAWYER BUSSEY - Dec 15, 2023, 6:42 PM CST

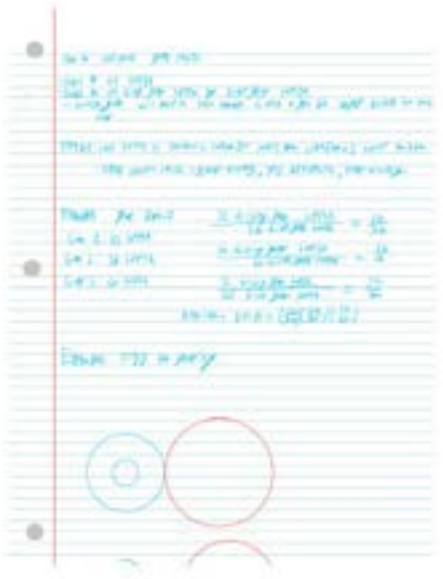

Download

Gear_ratio_research_1_.pdf (864 kB)

Countertop rail design

SAWYER BUSSEY - Dec 15, 2023, 6:43 PM CST

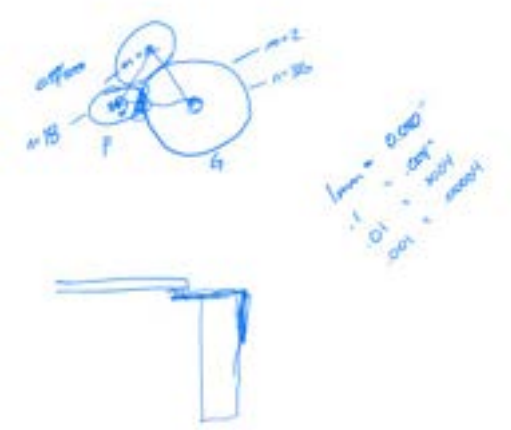

Download

Countertop_Rail_design_notes_1_.pdf (906 kB)

9/17/2023 - Notes on Improving on previous years

SAWYER BUSSEY - Sep 17, 2023, 2:43 PM CDT

Title: Notes on Improving upon previous years

Date: 9/17/2023

Content by: Sawyer Bussey

Present: Sawyer Bussey

Goals: To outline some objectives for our design

Content:

The year prior to ours mentioned in their final report that they experienced some issues with accuracy as testing continued. They said that this could have been due to faulty wiring that did not hold up over time or due to their fabrication process. Either way, I think that keeping a consistent level of accuracy of measurement should be a focus of ours during our testing process as that is very important in having accurate data whilst using a microscope.

Conclusions/action items:

Template for documents-Sawyer Bussey

SAWYER BUSSEY - Dec 15, 2023, 6:45 PM CST

Title:

Date:

Content by: Sawyer Bussey

Present: Sawyer Bussey

Goals:

Content:

Conclusions/action items:

Tong Lecture Notes

SAWYER BUSSEY - Dec 15, 2023, 6:36 PM CST

Title: Tong Lecture notes

Date: 11/10/2023

Content by: Sawyer Bussey

Present: Sawyer Bussey

- Went to the University of Pittsburgh
- Went to grad school at UW
- Wanted to focus on technology that would help people
- Ended up working on polymer spheres
- Works at exact sciences
- She encourages us to make connections and open view to making all kinds of relationships
- Be a mentor for the people that come after you
- Do things that scare you
    - She went with other medical students to speak for the affordable care act
    - Intimidating for her to do this since it was not necessarily engineering
- Failed at residency
    - Learned from the mistake
    - Redifined herself for the sake of her family
- Exact science
    - Working to eliminate cancer
    - Cancer care for all people
- Overall
    - FInd your people
    - Do the things that scare you
    - Laugh until you cry, laugh until you cry
    - Everyone is counting on you
-

Research Note 1

ZHAOYUN TANG - Sep 14, 2023, 10:33 PM CDT

Title: Research Note 1

Date: 9/13/2023

Content by: Zhaoyun Tang

Present: Zhaoyun Tang

Goals: To do some research to gain a better understanding of the project.

Content: https://www.instructables.com/Motorized-Microscope-Stage-for-Olympus-IX50/

The DIY project displayed on this webpage resembles what we have in mind, featuring key components we desire and offering a comprehensive inventory of necessary materials and parts. Our intention is not merely to replicate this project but to leverage it as a valuable guideline and reference. We aim to combine our innovations and concepts with existing ideas to enhance them further, aligning them more effectively with our clients' specific requirements.

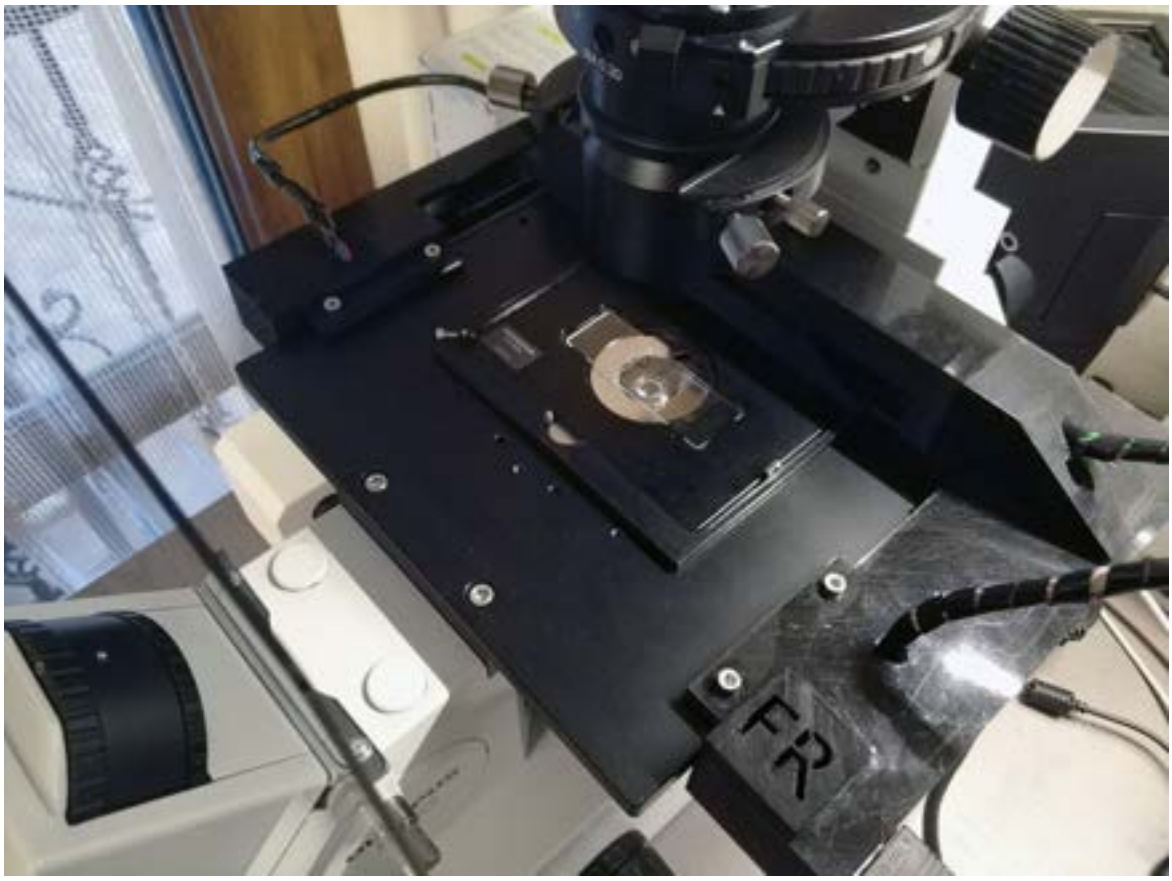

Conclusions/action items: Although this web page has detailed steps on building a motorized microscope stage, there may be other better designs. More research is needed because I do not know if this DIY project is going to work well with the microscope we are working with.

Research Note 2

Title: Research Note 2

Date: 9/13/2023

Content by: Zhaoyun Tang

Present: Zhaoyun Tang

Goals: To do some research to gain a better understanding of the project.

Content: https://www.ncbi.nlm.nih.gov/pmc/articles/PMC3935852/

The article discusses making a microscope stage that's not too expensive but can move accurately. This machine suits scientists and labs wanting to precisely control where their microscope slides go. In the article, they explained how they built this machine and how well it works. They used suitable stepper motors instead of more expensive linear actuators to save money on the equipment. They also put together the electronic parts using common hobby components that are simple to use. The budget they had for this project was under 1000 dollars.

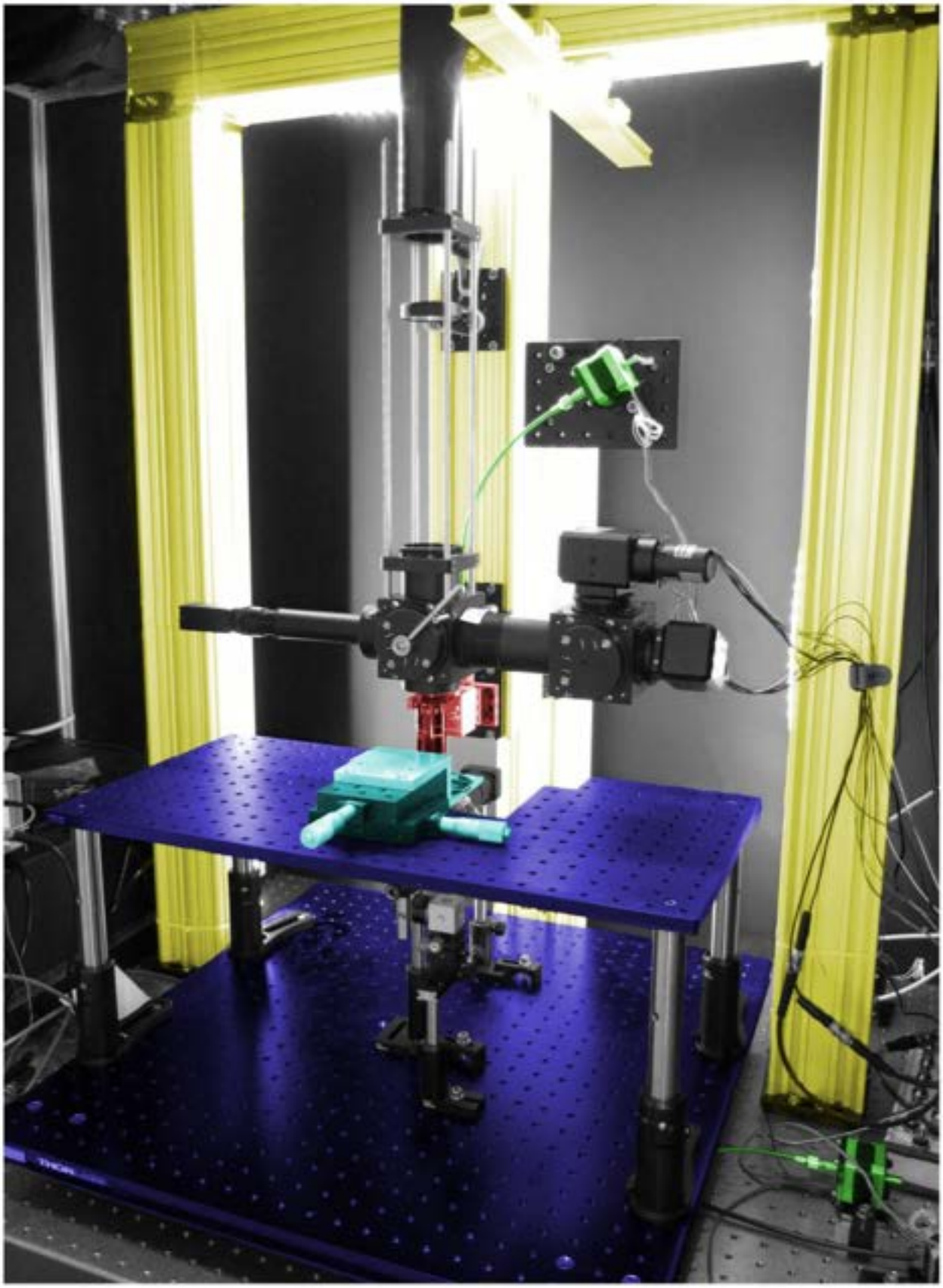

Conclusions/action items: This project by open stage can be used as a reference to our project. However, we need to make some adjustments because we aim to keep the cost under 100 dollars. We can learn from how they reduced the cost for the stage and take it a step further to accomplish what we want.

Reserch Note 3

ZHAOYUN TANG - Sep 14, 2023, 10:59 PM CDT

Title: Research Note 3

Date: 9/13/2023

Content by: Zhaoyun Tang

Present: Zhaoyun Tang

Goals: To do some research to gain a better understanding of the project.

Content:

https://www.ncbi.nlm.nih.gov/pmc/articles/PMC4711767/

https://www.nature.com/articles/nmeth817

These articles are about the working theory behind fluorescent microscopies.

Fluorescence microscopy works when the things you want to see can glow. Glowing happens quickly after they catch the light. But the light they give back is different from the light they caught. This difference in light is called the Stokes shift, which makes fluorescence microscopy great. You can use special filters to eliminate the light that makes things glow and only see the glowing stuff. This is better than other methods where you have to use things that soak up light. Those methods don't work well for small things. But with fluorescence, even tiny glowing things can be seen as long as there's no other glowing stuff around.

Conclusions/action items: The information from these articles can potentially be helpful because we are working with fluorescence microscopy.

Research Note 4

ZHAOYUN TANG - Sep 15, 2023, 8:52 PM CDT

Title: Research Note 4

Date: 9/15/2023

Content by: Zhaoyun Tang

Present: Zhaoyun Tang

Goals: To do some research to gain a better understanding of the project.

Content: http://183.181.162.36/products/instruments/lineup/bioscience/biological-microscopes/inverted/ti_eus/index.htm

This website is the product description of the Nikon Eclipse Ti Microscope, one of the types of microscope we will work with. It goes through the components and working theory for this model of microscope. The stuff we find on this webpage can make it easier for us to understand the microscope we're dealing with.

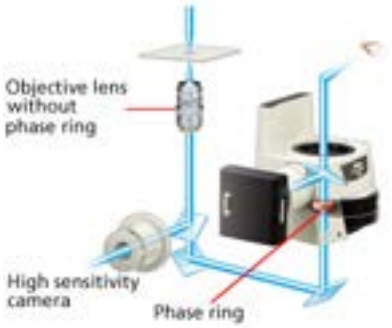

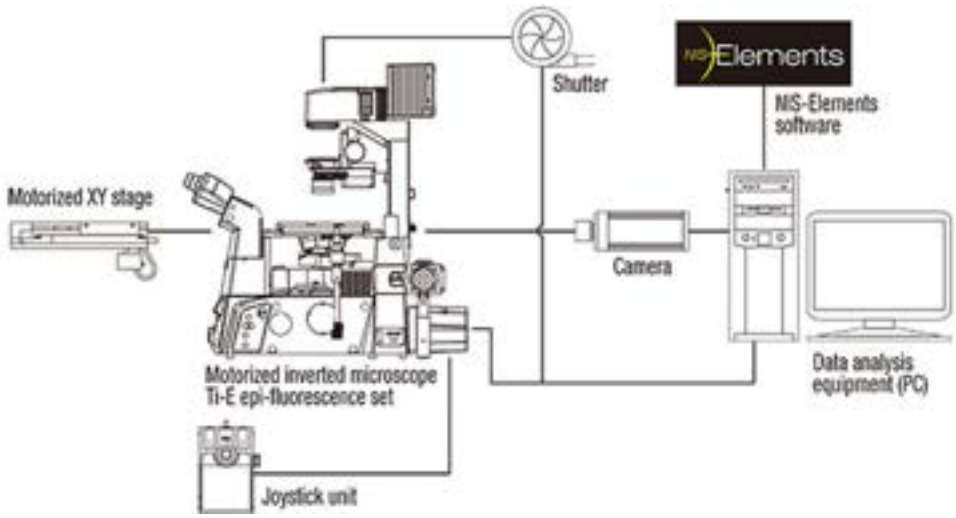

(It seems like this one already has a motorized stage, but other than that, most of the parts are the same as the microscope we are working with.)

Conclusions/action items: The information on this webpage can be helpful for us to understand what we are working with.

Research for competing designs 1

ZHAOYUN TANG - Oct 13, 2023

Title: Research for Competing Designs 1

Date: 10/11/2023

Content by: Zhaoyun Tang

Present: Zhaoyun Tang

Goals: To do some research for competing designs for the preliminary report.

Content:

"https://www.bostonind.com/nikon-ti-u-inverted-fluorescence-motorized-microscope-pred-ti2-av"

This website has the prices for the nikon-ti-u which is what we are working with, both brand new and used. They have the costs for the motorized version of the microscope we are working witl commercial product which is one of our competing designs. We are going to talk about the competing design section of our preliminary design. Since I am doing this section, this will help me a the market offers several commercial motorized stage replacements for conventional microscopes. These products come from established microscopy manufacturers and typically provide adv motorized stage capabilities. While these options often deliver high performance, they are associated with an extremely high price, which is not feasible. For example, the non-motorized fluore microscope that is currently used in the BME teaching lab is a Nikon TI-U, and a brand new motorized version of this microscope is around $70,000-$80,000[]. Due to the high cost of the comr motorized stage, people have come up with lower cost solutions.

Here is a Nikon Ti-U Inverted Fluorescence Motorized Microscope Pred Ti2

New model cost of the scope in this configuration is around $70,000-$80,000 from Nikon.

Setup for Brightfield with Fluorescence studies

- This microscope can be used in biological and material studies
- Enhancing components, such as Fluorescence Filter Cubes have been added (Other components are available)
- The total current magnification range of this microscope is 40 to 200x (Other objectives are available)
- This microscope is compatible with slides, petri dishes, and microplates
- This microscope includes an XY motorized stage
- The MicroManager software enables control of motorized components and allows for slide scanning (with motorized XY stage), Z stacking (with mechanical Z focus), and time laps imaging(with compatible camera)
- The included camera software allows for live viewing and image/video capture with variable linear measurements such as line segment, radius values, and others
- The easy to use interface also allows for customization of color and resolutions settings

Conclusions/action items: The information from this website can potentially be helpful because I am doing the competing design section.

Research for competing designs 2

ZHAOYUN TANG - Oct 13, 2023, 12:35 PM CDT

Title: Research for Competing Designs 2

Date: 10/11/2023

Content by: Zhaoyun Tang

Present: Zhaoyun Tang

Goals: To do some research for competing designs for the preliminary report.

Content:

https://journals.plos.org/plosone/article?id=10.1371/journal.pone.0088977

One of these solutions is an open source project called the Openstage, which is a three axis drive motorized stage system and a stand alone controller unit[]. The performance of this stage is close to and potentially better than those commercial options many times its price. Its accuracy in the X and Y direction is 1µm or better. The motion of the stage can be controlled through either a handheld controller or a program. Moreover, the controller software is very flexible and can be easily modified. However, some drawbacks of this design are that the project's total cost amounts to approximately $1000, which is still relatively high, and the design is bulky, occupying a significant amount of space.

Conclusions/action items: The information from this article can potentially be helpful because I am doing the competing design section.

ZHAOYUN TANG - Oct 13, 2023, 12:30 PM CDT

Openstage: A Low-Cost Motorized Microscope Stage with Sub-Micron Positioning Accuracy

Download

file.pdf (4.7 MB)

Research for competing designs 3

ZHAOYUN TANG - Oct 13, 2023, 12:39 PM CDT

Title: Research for Competing Designs 3

Date: 10/11/2023

Content by: Zhaoyun Tang

Present: Zhaoyun Tang

Goals: To do some research for competing designs for the preliminary report.

Content:

https://opg.optica.org/oe/fulltext.cfm?uri=oe-30-15-26377&id=477856

Another solution or competing design will be the Openflexture Delta Stage. In this design the stage is 3D printed and the base of the stage houses the electronic components which are powered using a Raspberry Pi. Using three stepper motors the stage can move in the X,Y, and Z axis. This design is compact and suitable for a laboratory bench or microbiological safety cabinet. The price of this stage is around $336 which is more acceptable than the previous two options.

Conclusions/action items: The information from this website can potentially be helpful because I am doing the competing design section.

Design sketch 1

ZHAOYUN TANG - Sep 29, 2023, 12:01 AM CDT

Title: Design Sketch 1

Date: 9/23/2023

Content by: Zhaoyun Tang

Present: not applicable

Goals: To put the ideas I brainstormed onto paper.

Content:

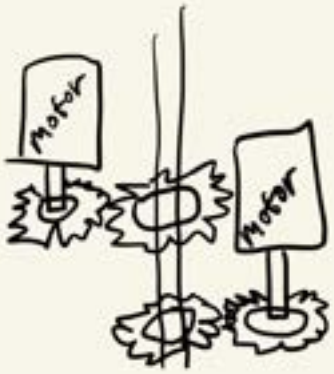

Conclusions/action items: This is a really rough draft, a lot of refining is needed.

Design sketch 2

ZHAOYUN TANG - Sep 29, 2023, 12:04 AM CDT

Title: Design sketch 2

Date: 9/25/2023

Content by: Zhaoyun Tang

Present: Not applicable

Goals: To put the ideas I brainstormed onto paper.

Content:

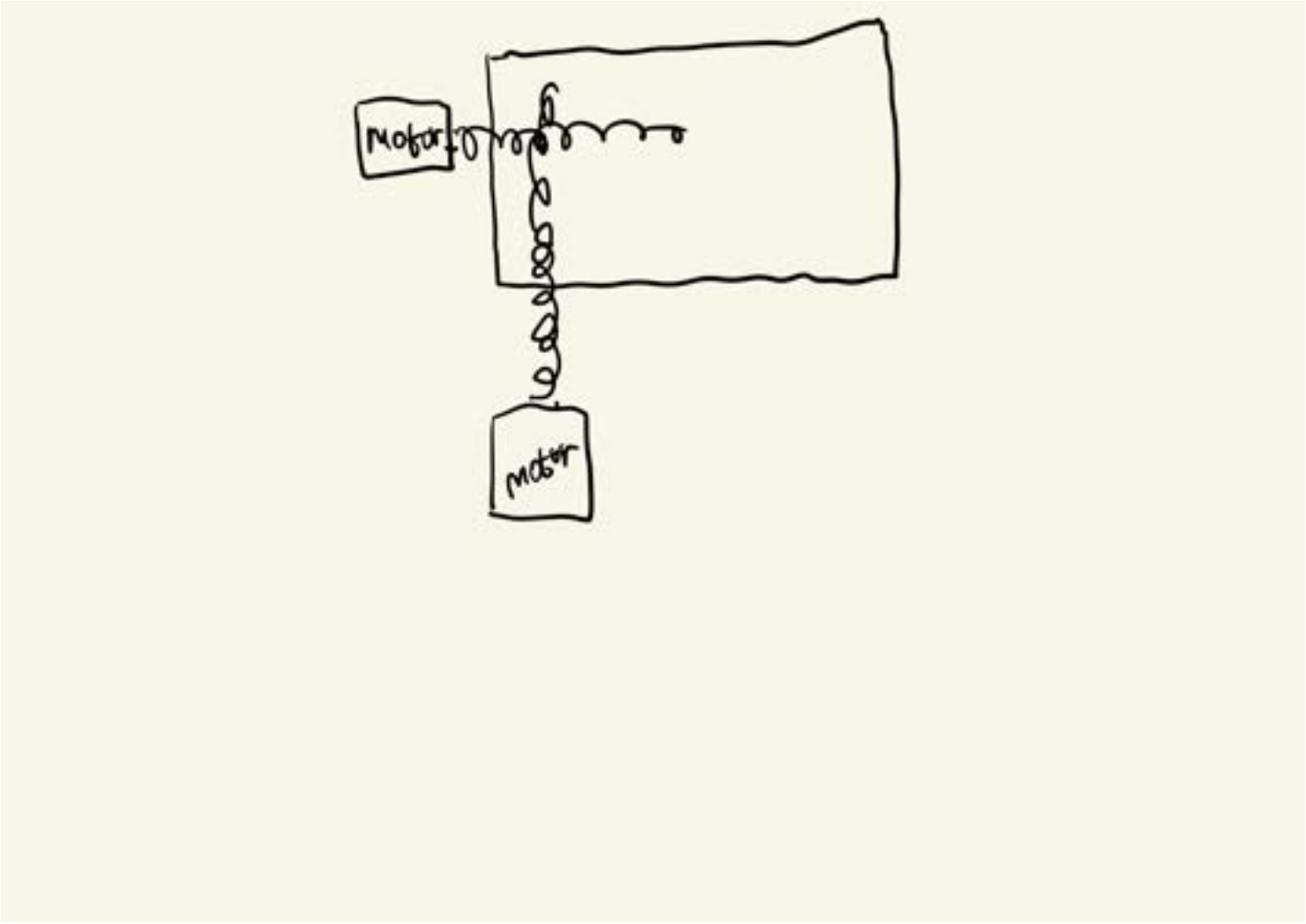

Conclusions/action items: This is also another really rough sketch.

Design sketch 3

ZHAOYUN TANG - Sep 29, 2023, 12:07 AM CDT

Title: Design sketch 3

Date: 9/27/2023

Content by: Zhaoyun Tang

Present: Not applicable

Goals: To put the ideas I brainstormed onto paper.

Content:

Conclusions/action items: This is a more refined sketch. Maybe can be used for the design matrix.

Design Sketch 4

ZHAOYUN TANG - Sep 29, 2023, 12:10 AM CDT

Title: Design sketch 4

Date: 9/25/2023

Content by: Zhaoyun Tang

Present: Not applicable

Goals: To put the ideas I brainstormed onto paper.

Content:

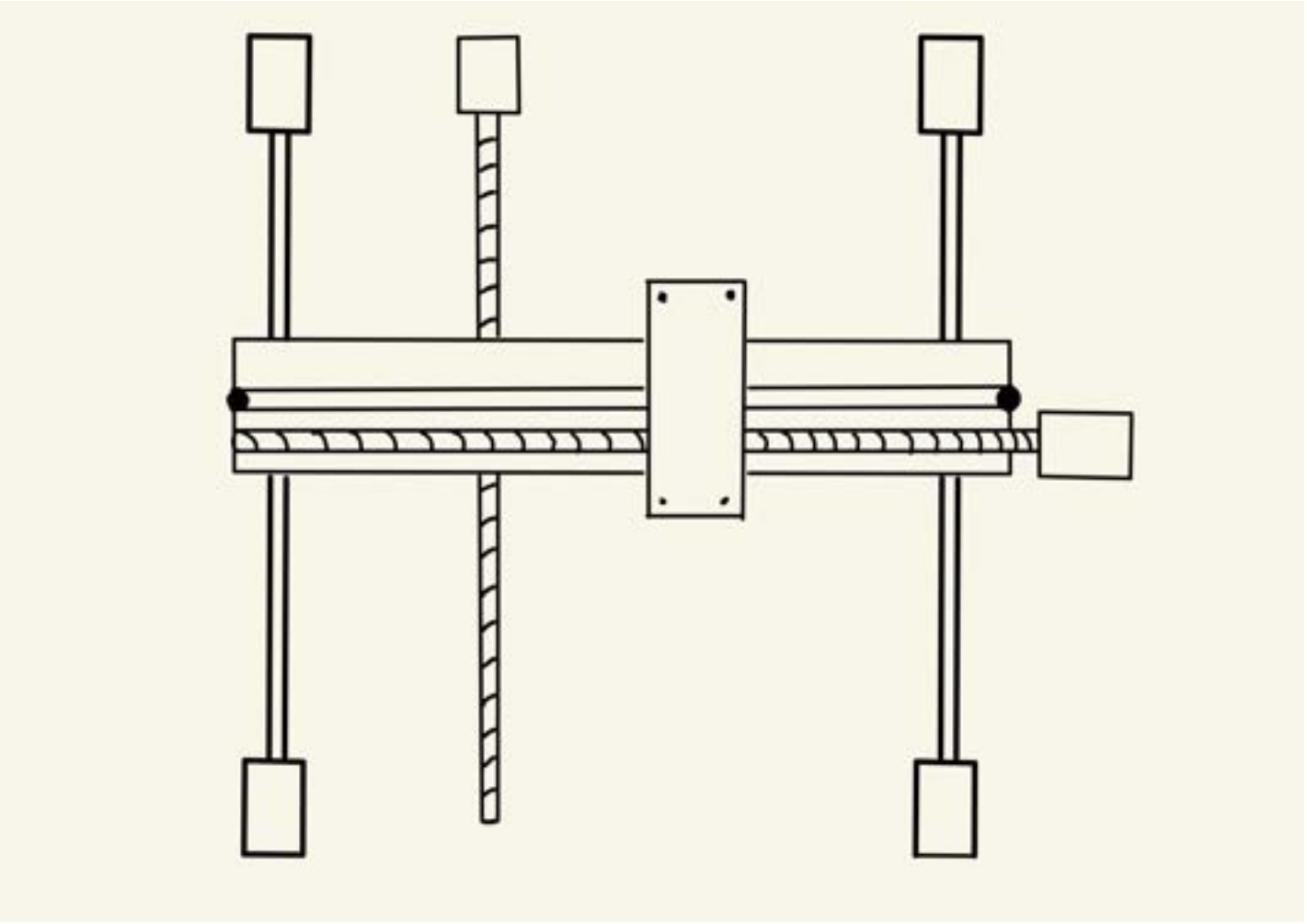

Conclusions/action items: This is also another more refined sketch for the linear rail design. May be used in the future.

9/15/2023 - Progress Report

ZHAOYUN TANG - Oct 13, 2023, 9:52 PM CDT

Title: Progress Report

Date: 9/15/2023

Content by: Zhaoyun, Team

Present: Zhaoyun, Team

Goals: Fill out first progress report

Content:

- Document seen below and in Google document attached below the text box. I filled out my portion of the progress report.

Microscope Low Cost Motorized Stage

Client: Dr. John Puccinelli

Advisor: Dr. Joshua Brockman

Team Members: Tyler Haupert, Julia Salita, Nicholas Symons, Sawyer Bussey, Zhaoyun Tang

Name	Email	Role
Tyler Haupert	thaupert@wisc.edu	Team Leader
Julia Salita	jsalita@wisc.edu	BSAC
Nicholas Symons	nsymons@wisc.edu	Communication
Sawyer Bussey	bussey2@wisc.edu	BWIG
Zhaoyun Tang	ztang259@wisc.edu	BPAG

Reporting Period: September 8th, 2023 - September 14th, 2023

Problem Statement:

The UW-Madison BME teaching lab currently houses two inverted fluorescent microscopes. While these contemporary pieces of equipment are functional in their current state, they leave a great deal to be desired when it comes to laboratory efficiency. Motorized alternatives do exist, however, cost continues to be a factor limiting the exposure students have to this technology. With a working budget of approximately $100, our team seeks to revolutionize the precision and automation of these microscopes through the creation of a novel microscope stage moving device. This design will allow for sequential, automated imaging of coordinate-based locations on slides. The creation of this device will increase the consistency of measurements, reduce the amount of time

spent during data collection, and lower the learning curve for operating this equipment. To remain competitive, design prototypes should be automated in both the X and Y directions and retain high precision and accuracy in translations (1 μm resolution).

Brief Status Update:

On Friday (9/8/2023) all 5 members of the team met and went through introductions. The team met with the advisor and established short term goals to guide group participation. On Monday, the team met independently for the first time to discuss role-specific and team goals. After the meeting, the communicator sent an email to the client with hopes to meet before the advisor meeting (9/15/2023 @ 12:30 pm).

Summary of Weekly Team Member Design Accomplishments:

- Team:
    - The LabArchives were purchased and shared to all members, a team photograph was taken, and team roles were decided. Following the meeting, folders were added to the shared google drive and documents such as the first progress report, the PDS, and meeting notes were created. All members of the team have begun preliminary research into the work of previous groups, market competition, and other resources.
- Tyler Haupert (Team Leader):
    - Reviewed material from previous BME group(s). Investigated current market-available and open-sourced alternatives to our design. Began brainstorming solutions to previous project complications as well as entirely new solutions to the problem at hand. Wrote up a discussion outline prior to the first team meeting to help all members understand their roles and responsibilities. Added questions to the cumulative team document in anticipation of client meeting.
- Julia Salita (BSAC):
    - Reviewed and learned material from past BME teams assigned this project
    - Closely reviewed each model and iteration of past semesters work to have a deeper understanding of the design
    - Created and organized folders in shared design space for current and future documents
    - Created templates for all major assignments and deliverables for future use
    - Created documents to track all pressing questions for the teams advisor and client
- Nick Symons (Communicator):
    - Researched competing designs such as the OpenStage and how they function. Looked at in-depth explanations for how individual components of the OpenStage system works and how Turner Lab made the OpenStage easy enough to build that anyone could replicate it and change the design to fit their needs.
- Sawyer Bussey (BWIG):
    - Researched previous design team’s milestones and accomplishments in order to understand what needs to be improved upon for our design
    - Went to the teaching lab to view the microscope that will be benefiting from our design.
    - Uploaded team photo to the project website as well as progress report
- Zhaoyun Tang (BPAG):
    - Reviewed and Studied designs from previous BME groups assigned to this project.
    - Researched about microscope motorized stage to learn more about the project.
    - Went to the teaching lab to view the final product of past groups.

Activities:

Date	Name	Task	Time (hours)	Weekly Total	Semester Total
9/8-9/13	Team	- team meeting to go over first day activities and establish roles - team meeting to clarify expectations, set client meeting, and begin work on research and PDS - Client meeting	- 1 - 1 - 1	3	3
9/11 9/13	Tyler	• Team meeting • Independent research • Progress report • Team meeting outline and notes • Client questions	- 1 - 1 - 1 - 2 - 0.25	5.25	5.25
9/11	Zhaoyun	• Team meeting • Research • Client questions • Fill out progress report	- 1 - 1 - 0.5 - 0.25	2.75	2.75
9/11 9/13	Nick	• Team meeting • Intro email to Dr. Puccinelli • Research • Progress report	• 1 • .5 • 2 • .25	3.75	3.75
9/11 9/14	Sawyer	-Team meeting -Visited teaching lab to view microscope -upload team photo and progress report -Project Reasearch -Upload progress report	-1 -0.5 0.25 1 0.25	3	3
		•			

Weekly/Ongoing Difficulties:

No current difficulties.

Upcoming Team and Individual Goals

- Tyler Haupert:
    - Continue working on and documenting project research and begin drawing up ideas for brainstorming meetings. Create PDS documents and begin documenting design specifications and requirements. Do more research into competing designs to better understand how their principles could be re-engineered into a more cost-effective alternative.
- Nick Symons:
    - Research information on the microscopes that we'll work with along with existing solutions and previously attempted solutions. Begin documenting all research.
- Sawyer Bussey:
    - Research methods of creating software that will aid the programming of our project
    - Research issues associated with the model of microscope we are working to improve
    - Complete PDS
    - Create questions for the client to improve understanding of the overall project as well as expectations upon completion.
- Zhaoyun Tang:
    - Conduct individual research to understand the project. Start thinking about ideas that can help the team to complete this project. Work with the team to complete the PDS.
- Julia Salita:
    - Complete additional research on the design from past semesters to get a better understanding of the calculations and numerical data collected
    - Complete the PDS according to past design semesters and new and relevant design criteria provided by the client
    - Brainstorm and document new ideas for improvement or redesign of the current set up.

Project Schedule/Timeline:

Project Goal	Deadline	Team Assigned	Progress	Completed
Product Design Specifications	9/22	All	0%	No
Design Matrix	9/29	All	0%	No
Preliminary Presentations	10/6	All	0%	No
Preliminary Deliverables	10/11	All	0%	No
Show and Tell	11/3	All	0%	No
Poster Presentations	12/8	All	0%	No
Final Deliverables	12/13	All	0%	No

Expenses:

- No Purchases as of 9/13

Conclusions/action items:

ZHAOYUN TANG - Oct 13, 2023, 9:52 PM CDT

Google Docs
Allow Google Docs access to your necessary cookies
You won't be able to access this content if necessary cookies are turned off
Learn more Allow cookies
Sign in to your Google Account
You must sign in to access this content
Sign in
Can't access your Google Account
We can't sign you in when the necessary cookies are turned off
Learn more
"); la_iframe_1702694431600.contentDocument.close();

week 2 progress report

ZHAOYUN TANG - Oct 13, 2023, 10:22 PM CDT

Title: Progress Report 2

Date: 9/17/2023

Content by: Zhaoyun, Team

Present: Zhaoyun, Team

Goals: Worked on progress report 2 with the team

Content:

- Document linked below

- Filled in the Progress Report

Conclusions/action items:

Work on the PDS and complete it on time.

ZHAOYUN TANG - Oct 13, 2023, 10:05 PM CDT

Google Docs
Allow Google Docs access to your necessary cookies
You won't be able to access this content if necessary cookies are turned off
Learn more Allow cookies
Sign in to your Google Account
You must sign in to access this content
Sign in
Can't access your Google Account
We can't sign you in when the necessary cookies are turned off
Learn more
"); la_iframe_1702694431910.contentDocument.close();

9/22/2023 - PDS

ZHAOYUN TANG - Oct 13, 2023, 10:00 PM CDT

Title: PDS

Date: 9/22/2023

Content by: Zhaoyun, Team

Present:

Goals: To contribute and help the team finish the PDS

Citations:

Content: I worked on several parts of the PDS, the whole document is attached as a google doc widget.

Conclusions/action items: The PDS was completed on time and submitted.

ZHAOYUN TANG - Oct 13, 2023, 10:00 PM CDT

Google Docs
Allow Google Docs access to your necessary cookies
You won't be able to access this content if necessary cookies are turned off
Learn more Allow cookies
Sign in to your Google Account
You must sign in to access this content
Sign in
Can't access your Google Account
We can't sign you in when the necessary cookies are turned off
Learn more
"); la_iframe_1702694432284.contentDocument.close();

Week 3 Progress Report

ZHAOYUN TANG - Oct 13, 2023, 10:14 PM CDT

Title: Progress Report 3

Date: 9/17/2023

Content by: Zhaoyun, Team

Present: Zhaoyun, Team

Goals: Work on progress report 3 with the team

Content:

- Document linked below

- Filled in the Progress Report

Conclusions/action items:

Complete the design matrix

ZHAOYUN TANG - Oct 13, 2023, 10:12 PM CDT

Google Docs
Allow Google Docs access to your necessary cookies
You won't be able to access this content if necessary cookies are turned off
Learn more Allow cookies
Sign in to your Google Account
You must sign in to access this content
Sign in
Can't access your Google Account
We can't sign you in when the necessary cookies are turned off
Learn more
"); la_iframe_1702694432808.contentDocument.close();

Design Matrix

ZHAOYUN TANG - Oct 13, 2023, 10:13 PM CDT

Title: Design Matrix

Date: 9/23/2023

Content by: Zhaoyun, Team

Present: Zhaoyun, Team

Goals: Help the team complete the design matrix and record contribution

Content:

- Document linked below

- Contributed to finishing the Design Matrix

Size:

The main factor considered for the size category is how much space the final product is going to occupy within the microscope workspace. This is primarily determined by the physical dimensions of the final product. This receives the fourth highest weight because a compact product is preferred due to limited lab space. Moreover, the product should be relatively small so it does not hinder the operator within the workspace. This criteria evaluates the *Size, Ergonomics, Aesthetics, Appearance, and Finish, and Spatial Configuration* sections of the PDS (Appendix 1).

Size:

The worm drive and linear designs were awarded a slightly higher score because they often offer a more compact design compared to spur gears. This compactness is particularly valuable in microscopy setups where space is limited. Spur gears can have larger gear diameters, potentially interfering with adjacent equipment or the operator's workspace.

I think these are the sections I worked on, and there should be some other parts I did, but I do not remember.

Conclusions/action items: Help the team with working on the preliminary presentation next.

ZHAOYUN TANG - Oct 13, 2023, 10:12 PM CDT

Google Docs
Allow Google Docs access to your necessary cookies
You won't be able to access this content if necessary cookies are turned off
Learn moreAllow cookies

Sign in to your Google Account
You must sign in to access this content
Sign in

Can't access your Google Account
We can't sign you in when the necessary cookies are turned off
Learn more
"); la_iframe_1702694433108.contentDocument.close();

ZHAOYUN TANG - Oct 13, 2023, 10:12 PM CDT

Week 4 Progress Report

ZHAOYUN TANG - Oct 13, 2023, 10:23 PM CDT

Title: Progress Report 4

Date: 10/05/2023

Content by: Zhaoyun, Team

Present: Zhaoyun, Team

Goals: Worked progress report 4 with the team

Content:

- Document linked below

- Filled in the Progress Report

Conclusions/action items: Work on preliminary presentation.

ZHAOYUN TANG - Oct 13, 2023, 10:21 PM CDT

Google Docs
Allow Google Docs access to your necessary cookies
You won't be able to access this content if necessary cookies are turned off
Learn more Allow cookies
Sign in to your Google Account
You must sign in to access this content
Sign in
Can't access your Google Account
We can't sign you in when the necessary cookies are turned off
Learn more
"); la_iframe_1702694433750.contentDocument.close();

Preliminary Presentation

ZHAOYUN TANG - Oct 13, 2023, 10:26 PM CDT

Title: Preliminary Presentation

Date: 10/06/2023

Content by: Zhaoyun, Team

Present: Zhaoyun, Team

Goals: Worked on Preliminary Presentation with the team

Content:

- Document linked below

- Worked and presented on slides 10 (half of it), 11, and 12.

Conclusions/action items:

Work on Preliminary Report next

ZHAOYUN TANG - Oct 13, 2023, 10:26 PM CDT

Download

Motorized_Microscope-Preliminary_Presentation-9_29_2023.pdf (1.02 MB)

Week 5 Progress Report

ZHAOYUN TANG - Oct 13, 2023, 10:34 PM CDT

Title: Progress Report 5

Date: 10/12/2023

Content by: Zhaoyun, Team

Present: Zhaoyun, Team

Goals: Worked on progress report 5 with the team

Content:

- Document linked below

- Filled in the Progress Report

Conclusions/action items: Complete the Preliminary Report

ZHAOYUN TANG - Oct 13, 2023, 10:30 PM CDT

Google Docs
Allow Google Docs access to your necessary cookies
You won't be able to access this content if necessary cookies are turned off
Learn more Allow cookies
Sign in to your Google Account
You must sign in to access this content
Sign in
Can't access your Google Account
We can't sign you in when the necessary cookies are turned off
Learn more
"); la_iframe_1702694434298.contentDocument.close();

Preliminary Report

ZHAOYUN TANG - Oct 13, 2023, 10:36 PM CDT

Title: Preliminary Report

Date: 10/13/2023

Content by: Zhaoyun, Team

Present: Zhaoyun, Team

Goals: Worked on Preliminary Report with the team

Content:

- Document linked below

Worked on the Introduction section and the design matrix evaluation section

Conclusions/action items:

Work on the PDS and complete it on time.

ZHAOYUN TANG - Oct 13, 2023, 10:35 PM CDT

Google Docs
Allow Google Docs access to your necessary cookies
You won't be able to access this content if necessary cookies are turned off
Learn more Allow cookies
Sign in to your Google Account
You must sign in to access this content
Sign in
Can't access your Google Account
We can't sign you in when the necessary cookies are turned off
Learn more
"); la_iframe_1702694434884.contentDocument.close();

Testing Ideas

ZHAOYUN TANG - Dec 15, 2023, 2:07 PM CST

Title: Testing Ideas

Date: 11/30/23

Content by: Zhaoyun Tang

Present:

Goals: To come up with testing ideas

Citations:

Content:

To test the lost motion, we can make the motor make a certain number of steps in one direction, make it move the same number of steps in the opposite direction, and measure the difference of the distance moved.

Conclusions/action items:

Progress report 6

ZHAOYUN TANG - Dec 15, 2023, 2:11 PM CST

Title: Progress Report 6

Date: 10/19/23

Content by: Zhaoyun, Team

Present: Zhaoyun, Team

Goals: Worked on progress report 6 with the team

Content:

- Document linked below

- Filled in the Progress Report

Conclusions/action items:

Keep Brainstorming about ways to prototype for show and tell

Work with the team to build the prototype

Research on ways to build the prototype

ZHAOYUN TANG - Dec 15, 2023, 2:11 PM CST

Google Docs
Allow Google Docs access to your necessary cookies
You won't be able to access this content if necessary cookies are turned off
Learn moreAllow cookies

Sign in to your Google Account
You must sign in to access this content
Sign in

Can't access your Google Account
We can't sign you in when the necessary cookies are turned off
Learn more
'); la_iframe_1702694435505.contentDocument.close();

progress report 7

ZHAOYUN TANG - Dec 15, 2023, 2:13 PM CST

Title: Progress Report 7

Date: 10/26/2023

Content by: Zhaoyun, Team

Present: Zhaoyun, Team

Goals: Worked on progress report 7 with the team

Content:

- Document linked below

- Filled in the Progress Report

Conclusions/action items:

- Researched on gears for mechanical component of the spur gear design
- Researched for fabrication method
- Attended the meeting with mechanical engineering professor Dr. Kazyak to discuss about the project

ZHAOYUN TANG - Dec 15, 2023, 2:12 PM CST

Google Docs
Allow Google Docs access to your necessary cookies
You won't be able to access this content if necessary cookies are turned off
Learn moreAllow cookies

Sign in to your Google Account
You must sign in to access this content
Sign in

Can't access your Google Account
We can't sign you in when the necessary cookies are turned off
Learn more
"); la_iframe_1702694436046.contentDocument.close();

progress report 8

ZHAOYUN TANG - Dec 15, 2023, 2:14 PM CST

Title: Progress Report 8

Date: 11/2/2023

Content by: Zhaoyun, Team

Present: Zhaoyun, Team

Goals: Worked on progress report 8 with the team

Content:

- Document linked below

- Filled in the Progress Report

Conclusions/action items:

- Work on the CAD model for show and tell
- Fabricate a prototype for the show and tell
- Meet with the CAE mechanical engineering professor to ask about CAD model of the design

ZHAOYUN TANG - Dec 15, 2023, 2:14 PM CST

Google Docs
Allow Google Docs access to your necessary cookies
You won't be able to access this content if necessary cookies are turned off
Learn moreAllow cookies

Sign in to your Google Account
You must sign in to access this content
Sign in

Can't access your Google Account
We can't sign you in when the necessary cookies are turned off
Learn more
"); la_iframe_1702694436559.contentDocument.close();

Progress report 9

ZHAOYUN TANG - Dec 15, 2023, 2:15 PM CST

Title: Progress Report 5

Date: 11/9/2023

Content by: Zhaoyun, Team

Present: Zhaoyun, Team

Goals: Worked on progress report 5 with the team

Content:

- Document linked below

- Filled in the Progress Report

Conclusions/action items:

- Work more on the CAD model for the final prototype
- Help fabricate the final prototype
- Meet with the CAE mechanical engineering professor to ask about CAD model of the design

ZHAOYUN TANG - Dec 15, 2023, 2:15 PM CST

Google Docs
Allow Google Docs access to your necessary cookies
You won't be able to access this content if necessary cookies are turned off
Learn more Allow cookies

Sign in to your Google Account
You must sign in to access this content
Sign in

Can't access your Google Account
We can't sign you in when the necessary cookies are turned off
Learn more
"); la_iframe_1702694437079.contentDocument.close();

Progress Report 10

ZHAOYUN TANG - Dec 15, 2023, 2:17 PM CST

Title: Progress Report 10

Date: 11/16/2023

Content by: Zhaoyun, Team

Present: Zhaoyun, Team

Goals: Worked on progress report 10 with the team

Content:

- Document linked below

- Filled in the Progress Report

Conclusions/action items:

- Work more on the CAD model for the final prototype
- Help fabricate the final prototype
- Fabrication or maybe even testing

ZHAOYUN TANG - Dec 15, 2023, 2:16 PM CST

Google Docs
Allow Google Docs access to your necessary cookies
You won't be able to access this content if necessary cookies are turned off
Learn moreAllow cookies

Sign in to your Google Account
You must sign in to access this content
Sign in

Can't access your Google Account
We can't sign you in when the necessary cookies are turned off
Learn more
"); la_iframe_1702694437483.contentDocument.close();

Progress report 11

ZHAOYUN TANG - Dec 15, 2023, 2:17 PM CST

Title: Progress Report 5

Date: 11/30/2023

Content by: Zhaoyun, Team

Present: Zhaoyun, Team

Goals: Worked on progress report 5 with the team

Content:

- Document linked below

- Filled in the Progress Report

Conclusions/action items:

Fabrication

Brainstorm testing ideas

Work on the final poster

ZHAOYUN TANG - Dec 15, 2023, 2:17 PM CST

Google Docs

Allow Google Docs access to your necessary cookies

You won't be able to access this content if necessary cookies are turned off

Learn more Allow cookies

Sign in to your Google Account

You must sign in to access this content

Sign in

Can't access your Google Account

We can't sign you in when the necessary cookies are turned off

Learn more

"); la_iframe_1702694438073.contentDocument.close();

Progress report 12

ZHAOYUN TANG - Dec 15, 2023, 2:19 PM CST

Title: Progress Report 12

Date:12/6/2023

Content by: Zhaoyun, Team

Present: Zhaoyun, Team

Goals: Worked on progress report 12 with the team

Content:

- Document linked below

- Filled in the Progress Report

Conclusions/action items:

Practice presenting

Update LabArchives

Complete updating the BPAG table

Help finish the final report

ZHAOYUN TANG - Dec 15, 2023, 2:18 PM CST

Google Docs

Allow Google Docs access to your necessary cookies

You won't be able to access this content if necessary cookies are turned off

Learn more Allow cookies

Sign in to your Google Account

You must sign in to access this content

Sign in

Can't access your Google Account

We can't sign you in when the necessary cookies are turned off

Learn more

"); la_iframe_1702694438574.contentDocument.close();

BPAG expense sheet

Title: BPAG expense sheet

Date: 12/8/2023

Content by: Zhaoyun

Present:

Goals: Worked on the BPAG expense sheet

Content:

Item	Description	Manufacturer	Mft Pt#	Vendor	Vendor Cat#	Date	QTY	Cost Each	Total	Link
Power Adapter	12V 4A Power Supply for the motors	COOLM	P2-12V4A	Amazon/Makerspace	B07H493GHX	10/23/2023	1	$12.99	$12.99	https://www.amazon.com/COOLM-100-240V-Adapte crid=17SJW8T0T8ADP&keywords=ac%2Bto%2Bdc%2
3D Prints	3D-printed components of the device			Makerspace			347g of PLA	$0.08/gram	$27.76	
Linear Rails	MGN12H Mini Linear Rail Guide,200mm Linear Sliding Gide with Carriage Block			Amazon			1	$15.99	$15.99	https://www.amazon.com/MGN12H-Sliding-Carriage
Stepper Motors	two Nema 17 Stepper Motor Bipolar from previous group	Nema	17HS19-1684S-PG51	StepperOnline.com			2	$31.38	$62.76	
Screws and Electronics	Screws used to secure compones in places and wires used for the Arduino			Makerspace			N/A	$7.00	$7.00	https://making.engr.wisc.edu/mini-mart/
Cutting Board	DEXAS 12 x 16 Poly Granite Cutting Board in Midnight Graniteused to fabricate the GMP	Dexas	452-50W	Walmart			1	$12.44	$12.44	https://www.walmart.com/ip/DEXAS-12-x-16-Poly-G
Arduino Uno	Arduino used to program the stepper motors	Arduino		Makerspace			1	$10.00	$10.00	https://making.engr.wisc.edu/mini-mart/
								TOTAL:	**$148.94**	

Conclusions/action items: Complete final report

Final Poster

ZHAOYUN TANG - Dec 15, 2023, 2:25 PM CST

Title: Final Poster

Date: 12/6/2023

Content by: Zhaoyun, Team

Present: Zhaoyun, Team

Goals: Worked on the final poster with the team

Content:

Materials	Place Purchased	Quantity	Cost
Arduino Uno	Makerspace	1	$10.00
Stepper Motors	StepperOnline.com	2	$62.76
Linear Rails	Amazon	1	$15.99
3D Prints	Makerspace	347g of PLA	$27.76
Cutting Board	Walmart	1	$12.44
Screws and Electronics	Various Vendors	N/A	~$7.00
Total			$135.95

Conclusions/action items: Practice presenting.

Final Poster Presentation

ZHAOYUN TANG - Dec 15, 2023, 2:29 PM CST

Title: Final Poster Presentation

Date: 12/10/2023

Content by: Zhaoyun, Team

Present: Zhaoyun, Team

Goals: Practice the final poster presentation with the team and individually

Content:

I presented the cost breakdown table part and the testing part of the final poster presentation.

Conclusions/action items: Complete the final report and other final deliverables.

ZHAOYUN TANG - Dec 15, 2023, 2:29 PM CST

Download

poster_presentation.pptx (4.94 MB)

Final Report

ZHAOYUN TANG - Dec 15, 2023, 2:49 PM CST

Title: Final Report

Date: 12/14/2023

Content by: Zhaoyun, Team

Present: Zhaoyun, Team

Goals: Worked on the final report with the team

Content:

- Document linked below

- I worked on Motivation, Existing Devices and Current Methods, Problem Statement, Design Matrix, Criteria Explanations, and Design Evaluations of the final report.

- Also made this picture below for the final report using SolidWorks.

Conclusions/action items: Remember to finish the peer evaluations.

ZHAOYUN TANG - Dec 15, 2023, 2:35 PM CST

Google Docs
Allow Google Docs access to your necessary cookies
You won't be able to access this content if necessary cookies are turned off
Learn more Allow cookies

Sign in to your Google Account
You must sign in to access this content
Sign in

Can't access your Google Account
We can't sign you in when the necessary cookies are turned off
Learn more
"); la_iframe_1702694439332.contentDocument.close();

ZHAOYUN TANG - Dec 15, 2023, 2:48 PM CST

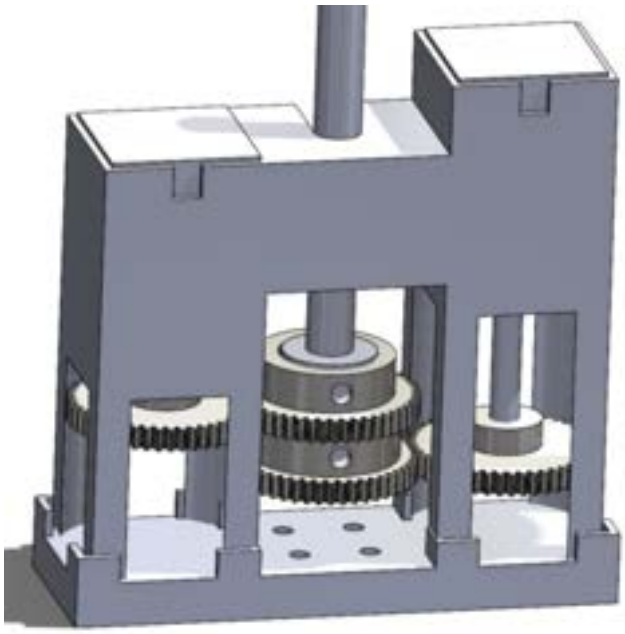

Download

Screenshot_2023-12-13_005407.png (214 kB)

Direct connection testing 1

ZHAOYUN TANG - Dec 15, 2023, 2:46 PM CST

Title: Direct connection testing 1

Date:

Content by: Zhaoyun, Nick

Present: Zhaoyun, Nick

Goals: Direct connection testing

Content:

A few days before Thanksgiving, Nick and I did our first direct connection testing. He programmed the motor to move 400 steps and I used a ruler to measure the distance the stage has moved. Then using the data we collected we calculated how far the stage was moving in the x direction every step the motor moved. However, the data collected left a lot of room for error. This test was later done with imageJ to get a more precise distance of how far the stage moved.

Conclusions/action items:

Tong Lecture Notes

ZHAOYUN TANG - Dec 15, 2023, 2:02 PM CST

Title: Tong Lecture

Date: 11/10/23

Content by: Zhaoyun Tang

Present:

Goals: To listen to the Tong distinguished lecture series

Citations:

Content:

Epilogue: Your Story
Engineer

1. A person who designs builds…

She is from Washington D.C., Her dad was an engineer. She wanted to be a doctor at first in college(university of pitssberg). Found some heart device and got interested. Find her own path. Developed leadership skills, communicate with the team. Had fun in college as a engineer. MD phd at uw madison. Her passion—Using technology to assist and help people. Learned her greatest lessons about resilience here at Madison failed for residency after med school. Health Equity Director at Exact Sciences.
1.find your people exposed to other things people who are not engineers (transfer essay) 2. Do things that scare you (too much in my comfort zone-transfer essay) lean into your passion and take a little risk. 3. Laugh until you cry, cry until you laugh.
Lean into the practice at UW-Madison, it is ok to fail
Everyone is counting on you, we are all connected. Embrace the suck so you can laugh about it later. Write a story for yourself so you will change the world in the future. You will do this.
What can I do will my degree? It is realistic? Does it work with my family etc. Take some of these draft ideas and think about them later to get a fresh perspective. Project become programs and programs become policies. You people you can pick up where you left out.
Equitable healthcare is not charity. 60% have insurance focused on these people to create revenue. Including more individuals will not hit the bottom line, giving the client what they want and need will satisfy them more than just giving the same product to everyone. It may take some time, but in the long run it will be better.
Technology is really good but could be bad if misused. Bias from algorithms.
Accepting help is important. Take somethings less seriously, you can’t care about everything. You may never get started, focuse on one thing at a time

Conclusions/action items:

BPAG meeting notes

Title: BPAG meeting

Date: 9/29/2023

Content by: Zhaoyun Tang

Present: Not applicable

Goals: Attend the BPAG meeting and understand more about what I need to do as a BPAG.

Content:

The general concepts:

1. Get the clients to purchase the materials
2. I pay and get reimbursed later on.

ShopUW+

Makerspace (to buy arduinos or small electronics)

1. Client can set up an account to pay for the materials
2. Fill out the team information excel sheet for the client
3. Minimart
4. Expertise

Team Lab (may not be available due to ECB flooding)

1. Tools
2. Stock room
3. Expertise

Accounting: mark every purchase on the template excel sheet, no reimbursement beyond 90 days.

Put the table in the progress report and team part of the online note book.

General Notes

- Have your client make purchases
- Have all expenses **APPROVED** by your client **PRIOR** to purchase
- Any purchase over $1000 must have departmental approval as well as client approval
- Check out the design resources page: http://bmedesign.engr.wisc.edu/course/resources/
- Ineligible UW vendors: https://www.bussvc.wisc.edu/purch/inel.html
- Save all original receipts. Seek reimbursement before the poster session.
- Keep track of all expenses
- To avoid problems, please see contact Dr. P before completing transaction, rather than after!

NON-Reimbursable expenses:
The following BME Design expenses are your/your team's responsibility

- LabArchives notebook = ~ $15 per team
- COE TEAMLab/Makerspace fee = ~$50 each (free this semester)
- Poster printing = ~$50 per team
- TOTAL = ~$63 / per person on a 5 person team (more like ~$13 because the Teamlab/Makerspace fee is free this semester)
- Discuss with your team how you want to divide these expenses

- Do NOT ask your client to pay for them

Conclusions/action items: Put the template excel table in the team part of the online note book.

OpenStage research

NICHOLAS SYMONS - Sep 13, 2023, 1:23 PM CDT

Title: Research on open stage

Date: 9/13/2023

Content by: Nicholas Symons

Present:

Goals: To research existing systems that solve the problem of a low-cost motorized microscope stage.

Content: Through the fall 2020 group's final report (Microscope low-cost motorized stage (wisc.edu)) there was a mention of the OpenStage project. OpenStage was made as an open source project to help people make a low-cost motorized microscope stage. low-cost in this case means around $1000, but we might be able to look at some of the designs that they used and apply something similar to our own microscopes. The project has a few websites that I'll include. The project report is BiblioBoard (openresearchlibrary.org) and the github website is GitHub - raacampbell/openstage: Arduino-based microscope stage controller. After looking at the design for the OpenStage, it appears that they use a ThorLabs micrometer drive connected to a stepper motor to get a very small movement. I'm not sure if the ThorLabs micrometer uses this, but while I was researching what micrometers are and how they work I came across something called a differential micrometer which lets you get extremely high precision liner movements. A video explaining it is here: https://youtu.be/rxjKOlP-XQU. The ThorLabs micrometers cost anywhere from $75 to $500 so we probably won't be able to afford any of these, but we could try to design something similar.

Conclusions/action items: I'll have to do more research on this system and others like it, but we could implement some of the ideas from here into our design.

Image Stitching

NICHOLAS SYMONS - Sep 15, 2023, 2:09 PM CDT

Title: Beginning research on image processing

Date: 9/15/23

Content by: Nicholas Symons

Present:

Goals: Research image stitching

Content: After our advisor meeting with Dr. Brockman I started looking at how image stitching works in MATLAB (even though I haven't learned much about MATLAB yet). MATLAB has good documentation of an example at Feature Based Panoramic Image Stitching - MATLAB & Simulink (mathworks.com). I don't really understand it, but it could be helpful if we have to create software for the image processing. It seems like the code that is explained on that website is functional code, so we could try using it and see if it would work for our application.

Conclusions/action items: Continue to research image stitching. There are many videos on Youtube that could help as well.

Eclipse Ti2-U research

NICHOLAS SYMONS - Sep 28, 2023, 11:51 AM CDT

Title: Nicholas Symons

Date: 9/28/23

Content by: Nicholas Symons

Present:

Goals: To find the range of motion of the microscope stage.

Content:

After looking on Nikon's website for information on the Eclipse Ti2-U, I found this brochure:

ECLIPSE Ti2-U Inverted Microscope for ICSI_4p_2CE-MRRL-1(for NII NIE) (nikon.com)

Under the stage specifications section it states that the stage stroke is +- 57mm in the x direction and +- 36.5mm in the y direction. this means the total range of motion is 114mm in the x direction and 73mm in the y direction.

This information is need if we use my linear rail / linear gear design because the linear gears will need to be slightly longer than this travel distance.

Conclusions/action items: I found the range of motion of the microscope we will be working with.

Inventor Gear Generator

NICHOLAS SYMONS - Oct 09, 2023, 9:59 PM CDT

Title: Inventor Gear Generator

Date: 10/9/23

Content by: Nicholas Symons

Present:

Goals: To research alternative ways to fabricate gears.

Citations:

Content: Wile looking for ways to make gears that don't involve laser cutting, I found that Autodesk Inventor has a spur gear design feature that lets you input your desired size, gear ratio, and number of teeth and it will output files for two spur gears. I might try 3D printing some of these to see how well they would work.

Here is a support page for how to use the gear design feature: Inventor 2022 Help | Design spur gears | Autodesk

Conclusions/action items: I will try to print some of the gears in PLA to see how well they work.

First time using previous semester's design

NICHOLAS SYMONS - Oct 16, 2023, 8:22 PM CDT

Title: First use of previous groups design

Date: 10/16/2023

Content by: Nick Symons

Present:

Goals: To untangle the mess of wires that is the final product from last semester

Citations:

Content: After our team meeting, we went to ECB to pick up the motors, drivers, breadboards, and other supplies from last semester. I took them home with me because I wanted to start learning how to program the drivers and motors, but the wiring was a huge mess. The previous team had cut open an AC/DC adapter and used alligator clips to connect the ends of the adapter wires to the power inputs of the drivers. I think there would be a better (and safer) way to connect the drivers to power, but for now I'm not sure what that would be.

Another thing that I noticed is that the motors that the last team bought are about $61 on stepperonline.com, but there is another very similar version that is only $37. Nema 17 Stepper Motor L=40mm Gear Ratio 100:1 MG Series Planetary Gearbox - 17HS15-1584S-MG100|STEPPERONLINE (omc-stepperonline.com). (here is the link). This other version has almost identical specifications except for the use of a MG Planetary gearbox instead of the Planetary gearbox. This would be a much better budget-friendly option as long as it performs similarly.

I also started doing research on how to code the Arduino to control the drivers, and it seems pretty simple. I think that if we can find a better way to power the motors/drivers, it won't be that difficult to get basic motion out of the motors. Here is a tutorial that I think will be very helpful for coding: TB6600 Stepper Motor Driver with Arduino Tutorial (3 Examples) (makerguides.com).

There is also a simple joystick that we will be able to use, I will just have to do some research to figure out how to program with it.

Conclusions/action items: We need to find a better way to power everything and then start wiring and coding the motors/drivers. We will also need to keep all of the wiring neat and compact.

After meeting with Dr Nimunkar

NICHOLAS SYMONS - Oct 19, 2023, 12:45 PM CDT

Title: After meeting with Dr Nimunkar

Date: 10/19/2023

Content by: Nick Symons

Present:

Goals: To continue researching power supply choices and to begin preliminarily wiring the stepper motors / drivers.

Citations:

Content: During our meeting with Dr Nimunkar we got some questions answered so that we can start wiring and programing the motors and drivers. The main things that were found were:

We need to get a different power supply that has a higher current rating because the motors each take 1.68 amps and the previous power supply only had 1 amp available. I found a 12V 4A converter on amazon for $12.99 that should work well. Amazon.com: 12V 4A Power Supply - COOLM AC 100-240V 50/60Hz to DC 12 Volt 4 amp 4Amp 48W Power Converter Charger 12V4A + 5.5x2.1mm DC Female Jack Socket for 12V LED Strip Lights CCTV Camera : Electronics. This adapter also comes with an attachment that would let us directly connect free ends of wires without having to cut open the adapter.

If we need to splice wires together, we can solder them and then use heat shrink tubing to insulate the wire. This will be much better than using alligator clips like the last group used.

Conclusions/action items: We will need to buy some heat shrink tubing from the makerspace and get the AC/DC adapter from amazon (the makerspace doesn't appear to have any)

Joystick Research

NICHOLAS SYMONS - Nov 08, 2023, 9:33 AM CST

Title: Joystick Research

Date: 10/23/23

Content by: Nick Symons

Present:

Goals: To learn how to read information from the joystick

Citations:

Content: One of the previous teams bought a simple joystick from the Makerspace. This joystick is made up of two potentiometers and a button switch.

After doing some testing, I believe that the left and right connections are 5v and ground and the middle connection is the signal output.

I've attached the file for the code. When you click on the file it will ask you to make a folder to put the file in, and you will have to click continue or whatever it prompts you to do. it will just make a folder in the downloads folder on your computer.

There are a lot of comments that I've included describing what each line does and some information after the regular code about the next steps in this process.

Conclusions/action items: This code will have to be modified and added to other code that will act on the information received from the joystick.

We also need to wire the circuits so that we aren't using breadboards anymore.

It might be worth it to get the Arduino joystick module instead of using the cheap joystick the previous team bought because the Arduino version is already soldered onto a board and would be much simpler to use.

NICHOLAS SYMONS - Oct 23, 2023, 3:21 PM CDT

Download

Joystick_Test.ino (1.82 kB)

Reading user input on the Arduino serial

NICHOLAS SYMONS - Nov 09, 2023, 9:14 PM CST

Title: Reading user input

Date: 11/9/23

Content by: Nick Symons

Present:

Goals: To learn how to read user input in the Arduino serial monitor

Citations:

Content: I found This article that explains how to have the Arduino ask the user for an input value and then use that data to do something. We will need this for testing our direct connection to the x knob of the microscope as we will be inputting a distance that we want the stage to be moved and then getting the motors to move a related number of rotations. This will have to be in a separate Arduino sketch from the joystick code because it is a completely different way of moving the motors (unless we could utilize the joystick button to toggle between the two modes, but that could get very complicated).

Conclusions/action items: We need to write a version of the code that will take an input from the user and then move the motors accordingly.

Tong Lecture

NICHOLAS SYMONS - Nov 10, 2023, 12:30 PM CST

Title: Tong Lecture

Date: 11/10/23

Content by: Nick Symons

Present:

Goals: To listen to the Tong distinguished lecture series

Citations:

Content: Takeaways:

- Find inspiration in little things
- Enjoy college and learn from everything, especially things that aren't engineering related
    - Push out of your comfort zone
- Make lots of friends. They will be with you for a long time
- Failing opens up new opportunities
    - Be okay with failing during school because it's just practice
-

Conclusions/action items:

Stepper motors

NICHOLAS SYMONS - Sep 20, 2023, 2:57 PM CDT

Title: Stepper motors

Date: 9/20/23

Content by: Nicholas

Present:

Goals: to research types of stepper motors and gear boxes

Content: The first group for the motorized stage project ordered 2 Nema 17 stepper motors with 100:1 gearboxes attached (Nema 17 Stepper Motor L=40mm Gear Ratio 100:1 MG Series Planetary Gearbox - 17HS15-1584S-MG100|STEPPERONLINE (omc-stepperonline.com). These motors have a step size of 1.8 degrees, which is fairly small, but we could get motors with a 0.9-degree step size and it might help with the accuracy of the system. We could also look at different gear box sizes to see if there are any that would give better precision. As far as I can see on the stepperonline website linked above, they don't have any gearboxes that would help any more than the 100:1.

In order to reduce the cost of the project we could get stepper motors that don't have a gear box, and then design and fabricate our own gear box. This could reduce costs significantly but would most likely increase the amount of space needed for the system.

Conclusions/action items:

Worm gear design

NICHOLAS SYMONS - Sep 25, 2023, 11:56 AM CDT

Title: Worm gear design idea

Date: 9/23/23

Content by: Nicholas Symons

Present:

Goals: To come up with ideas to improve upon previous designs.

Content: The first group for the motorized microscope base project opted to use a worm gear design, which I think was a very good idea. Worm gears let you get a high gear ratio without taking up a ton of space. The group that used worm gears had to have the stepper motor turned sideways in order to have the worm gear mesh with the gear on the manual knob, and this ended up taking up a lot of space to the side of the microscope. I've included a picture of this design below for reference.

Because the stepper motors were turned sideways, they could only really be placed to the right of the manual knob (which is where you can see them in the picture). I think if we could turn the stepper motors vertically and add another gear then we might be able to fit the motors either directly above or below the acrylic gears that can be seen in the image. This would complicate the design because we would need more gears to transfer the motor's power but could save a significant amount of space.

It might also be easier to just have a relatively small spur gear connected to the motor and a relatively large spur gear connected to the manual knob, that way we would only need two gears. This is probably the simplest design possible. (Now that I'm reviewing the previous semester's design, I see that this is exactly what they did.)

Conclusions/action items: We would have to come up with a reliable way to transfer the motor's power differently from before with a worm gear.

NICHOLAS SYMONS - Sep 23, 2023, 6:52 PM CDT

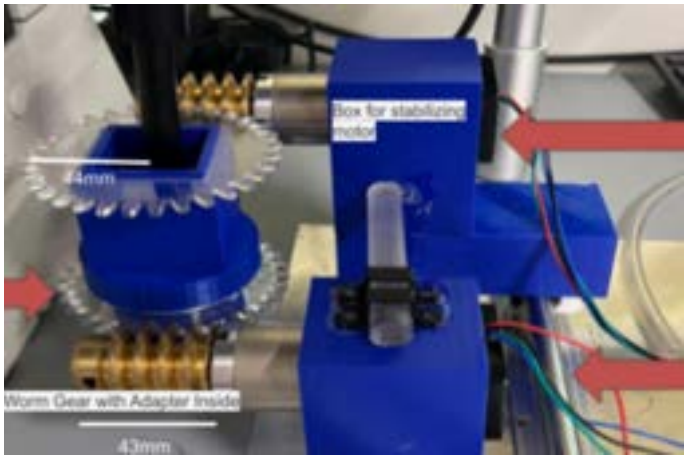

Download

Screenshot_2023-09-23_185158.png (354 kB)

Preliminary Design

Title: Preliminary Design

Date: 9/28/23

Content by: Nicholas Symons

Present:

Goals: To draft a preliminary design that directly moves the stage without interfacing with the manual knobs.

Content: I made a quick model in Autodesk Inventor that shows my idea to directly move the microscope stage using linear gears and a linear rail system. I've attached the isometric view and top view of my design.

I also typed up a document that goes over how the design would work along with pros and cons of the design, which I will paste here:

I put linear gears on the side and back of the microscope stage. At this point I dont have any specific measurements for the gears other than the length which I put as 5 inches because that's a little bit bigger than the range of motion of the stage (range of motion is max 4.48 in., found on ECLIPSE Ti2-U Inverted Microscope for ICSI_4p_2CE-MRRL-1(for NII NIE) (nikon.com))
The stepper motors are oriented vertically next to and underneath the stage so that a spur gear can mesh with the linear gear. Again, I didn't do any kind of measurements for the spur gear, I just made a quick model to show what it would look like.
The stepper motors are attached to linear rails so that they can move perpendicular to the stage but stay stationary in the parallel direction. This makes it so the motors can move the stage but also move with the stage when the other motor is moving the stage.

Problems:

- Because there is only one rail for each motor, the motors are free to turn on the rails axis which is a big problem. We would need to figure out how to stabilize the motors so they don't rotate.
- The spur gear on the motor needs some kind of tension to keep it meshed with the linear gear. I think having some kind of elastic band wrapped around the motor and then attached under the stage would provide enough force to keep the gears meshed, but then there would be a problem with differing tensions as the motor moves to the extremities of the linear gear.
- We would need to find somewhere to attach the linear rails and linear gears.
- The linear rails will need to be perfectly perpendicular to the linear gears, and if they get bumped into a new position it would introduce error.

Good things:

- This design leaves the manual knobs untouched so they can be used at any time without removing the motors/gears.
- The motors/gears would be on the side and back of the stage, which is out of the way and out of sight.
- This design removes the variable of having to interact with the manual knob and instead interacts directly with the stage.

I think this is a fairly good design as long as we could find good solutions to the problems stated above.

Conclusions/action items: We need to check with the client to see if he is ok with us directly moving the stage. He had previously stated that he liked the idea of interacting with the manual knobs. If we choose to pursue this design, we will need to solve a few problems brought up by the design.

NICHOLAS SYMONS - Sep 28, 2023, 11:31 AM CDT

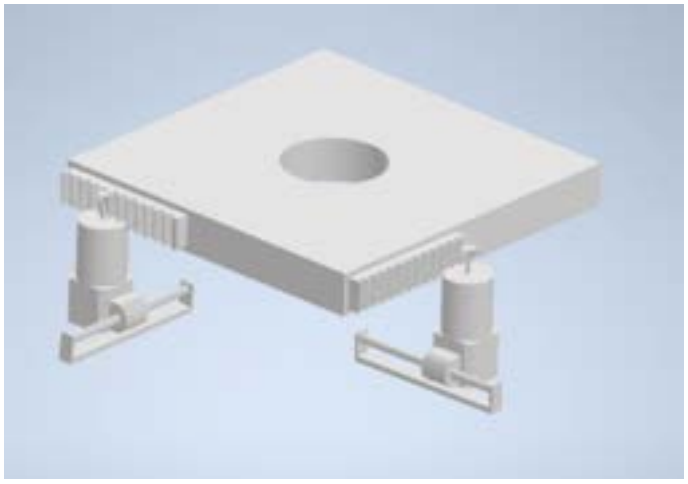

Download

Screenshot_2023-09-28_110439.png (303 kB)

NICHOLAS SYMONS - Sep 28, 2023, 11:31 AM CDT

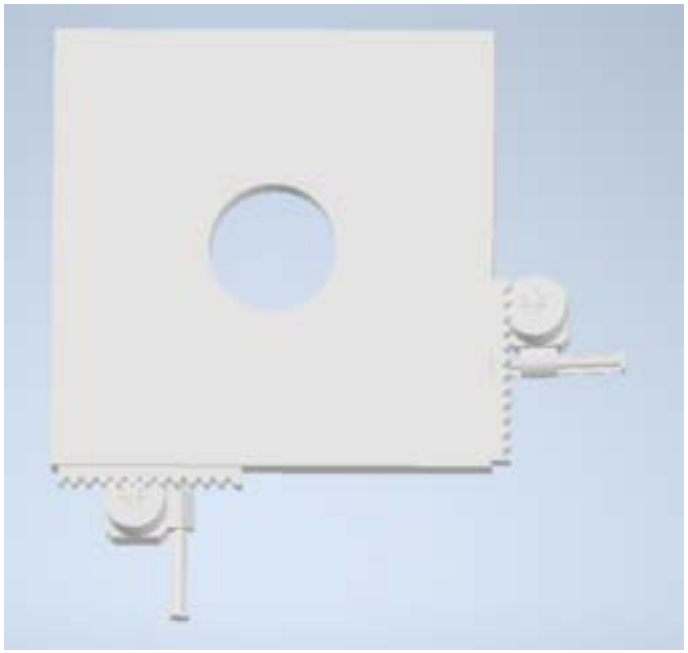

Download

Screenshot_2023-09-28_110648.png (176 kB)

Direct attachment to manual knob

NICHOLAS SYMONS - Nov 20, 2023, 11:10 AM CST

Title: Direct attachment to manual knob

Date: 11/20/23

Content by: Nick Symons

Present:

Goals: To design a way to directly connect a stepper motor to the x-movement portion of the manual knob.

Citations:

Content: In order to test our code and the movement of the microscope stage, we planned on connecting one stepper motor to the x-direction portion of the manual knob (because then we don't have to deal with y travel), but we found out last week that this won't work how we planned because the control knob doesn't rotate at enough of an angle past vertical (it points straight down at the table and we can't get a motor under it). I've attached the original design for the direct attachment piece below, titled Direct_Attachment_V2. It is an inventor file, so I don't think it will work if you use SolidWorks.

We then came up with the idea of using a universal joint, which is basically two U shaped brackets that connect to a center ring and permit rotational force to be transferred at an angle. I found This design on the Ultimaker Thingaverse website that looked close to what we needed, so I put it into Inventor and edited it so that the ends would be able to connect to the motor and manual knob, respectively. I also edited the shape of the parts so that they would be slightly smaller, use less material in case I needed to reprint them, and possibly let them rotate at a larger angle. I've included both the original assembly file from the Thingaverse (Assembly.iam) website and my edited version (New_Direct_Connection.iam) of it below.

The only things we need to do to finish this is to add the threaded insert to the part that connects to the manual knob. After that, we should be able to get some testing done tonight.

Conclusions/action items: We need to add the threaded inserts and begin testing.

NICHOLAS SYMONS - Nov 20, 2023, 8:30 AM CST

Download

Direct_Attachment_V2.ipt (537 kB)

NICHOLAS SYMONS - Nov 20, 2023, 8:46 AM CST

Download

New_Direct_Connection.iam (379 kB)

NICHOLAS SYMONS - Nov 20, 2023, 8:46 AM CST

Download

Assembly.iam (154 kB)

Update to direct attachment

NICHOLAS SYMONS - Nov 20, 2023, 11:08 AM CST

Title: Update to direct attachment

Date: 11/20/23

Content by: Nick Symons

Present:

Goals: To redesign part of the direct attachment

Citations:

Content: After going to the teaching lab and holding the pieces of the direct attachment in place, I think that some of the parts will be too big and will bump into the table. In order to fix this, I redesigned the piece that connects to the manual knob to be slightly shorter and to allow a greater angle of revolution as well. I've attached the new version below.

Conclusions/action items: We need to add the threaded inserts and then begin testing.

NICHOLAS SYMONS - Nov 20, 2023, 11:08 AM CST

Download

Fork_to_knob_V2.ipt (514 kB)

Electronics Box

NICHOLAS SYMONS - Dec 01, 2023, 12:17 PM CST

Title: Electronics Box

Date: 12/1/23

Content by: Nick Symons

Present:

Goals: To make a box that can contain the electronic components

Citations:

Content: I designed a box that holds the two stepper drivers, the Arduino, and the wires that connect everything. The stepper drivers have heat sinks on them to dissipate heat, so I included some vents on the sides of the boxes to allow some airflow and also have holes for the wires to exit to the motors and enter to the Arduino.

I've included the Inventor file below.

Conclusions/action items: I'd still like to make a lid to close the box and add some Velcro strips to stop stuff from moving around inside.

NICHOLAS SYMONS - Dec 01, 2023, 12:15 PM CST

Download

Stepper_Driver_Box.ipt (348 kB)

Progress report 1

NICHOLAS SYMONS - Sep 18, 2023, 7:52 PM CDT

Title: Progress report 1

Date: 9/14/23

Content by: Nicholas

Present:

Goals: To fill out and send the first week's progress report

Content: I filled in my portion of the progress report and emailed it to the client and advisor.

Conclusions/action items:

NICHOLAS SYMONS - Sep 18, 2023, 7:53 PM CDT

Download

Week_1_Progress_Report_09_08_2023-09_14_2023.pdf (94 kB)

PDS work 9/18/23

NICHOLAS SYMONS - Sep 22, 2023, 10:54 AM CDT

Title: PDS work 9/18/23

Date: 9/18/23

Content by: Nicholas Symons

Present:

Goals: To work on the PDS

Content: I filled in any parts of the PDS that I knew the answer to. This included the part of the ergonomics, product characteristics, and miscellaneous sections. I'll include the PDS document once we've finished it.

Conclusions/action items:

PDS work 9/22/23

NICHOLAS SYMONS - Sep 22, 2023, 11:00 AM CDT

Title: PDS work 9/22/23

Date: 9/22/23

Content by: Nicholas Symons

Present:

Goals: To finish working on the PDS document.

Content: I finished filling out a few more sections of the PDS including some of the safety considerations, shelf life, and standards/specifications. There are still a few spots that need to be edited or added to, so we will talk about that today after our advisor meeting.

My Zotero app isn't working for me for some reason, so I haven't been able to link any sources yet, but I'll figure out how to get it working.

Conclusions/action items: We need to finish the PDS and I will have to email it to the client and advisor at some point today.

Progress report 2

Title: Progress report 2

Date: 9/21/23

Content by: Nicholas Symons

Present:

Goals: To fill out and submit the second progress report.

Content:

Microscope Low Cost Motorized Stage

Client: Dr. John Puccinelli

Advisor: Dr. Joshua Brockman

Team Members: Tyler Haupert, Julia Salita, Nicholas Symons, Sawyer Bussey, Zhaoyun Tang

Name	Email	Role
Tyler Haupert	thaupert@wisc.edu	Team Leader
Julia Salita	jsalita@wisc.edu	BSAC
Nicholas Symons	nsymons@wisc.edu	Communication
Sawyer Bussey	bussey2@wisc.edu	BWIG
Zhaoyun Tang	ztang259@wisc.edu	BPAG

Reporting Period: September 15th, 2023 - September 21st, 2023

Problem Statement:

The UW-Madison BME teaching lab currently houses two inverted fluorescent microscopes. While these contemporary pieces of equipment are functional in their current state, they leave a great deal to be desired when it comes to laboratory efficiency. Motorized alternatives do exist, however, cost continues to be a factor limiting the exposure students have to this technology. With a working budget of approximately $100, our team seeks to revolutionize the precision and automation of these microscopes through the creation of a novel microscope stage moving device. This design will allow for sequential, automated imaging of coordinate-based locations on slides. The creation of this device will increase the consistency of measurements, reduce the amount of time spent during data collection, and lower the learning curve for operating this equipment. To remain competitive, design prototypes should be automated in both the X and Y directions and retain high precision and accuracy in translations (1 μm resolution).

Brief Status Update:

This week the team's primary goal was to complete the PDS. The team had our first meeting with our client, Dr. Puccinelli, and our first meeting with our advisor, Dr. Brockman on Friday September 15th.

Summary of Weekly Team Member Design Accomplishments:

- Team:
  - This week the team met with Dr. Brockman on Friday. During this meeting we established goals, timelines, and went over the project to fine tune our understanding. Following this meeting we began to work on the PDS, and met as a team on monday to reassess and collaborate on it. As of now, the project is not completely finished, but is almost there.
- Tyler Haupert (Team Leader):
  - Worked on PDS, researching various topics relevant to drafting of PDS. Began sketching up brainstorming ideas on personal IPad. Documented work in LabArchives
- Julia Salita (BSAC):
  - Met with our client and had numerous questions answered
  - Started PDS and have minimal work left in order to complete the PDS
  - Conducted additional research
  - Attended weekly BSAC meetings and discussed ways to improve teaching BME 200 student and implemented those suggestions
- Nick Symons (Communicator):
  - Met with client to see the microscopes that we'll be working with
  - Researched types of stepper motors and gearboxes
  - Worked on PDS
- Sawyer Bussey (BWIG):
  - Uploaded previous weeks progress report
  - Worked on pds
  - Researched microscope standards
  - Researched type Nikon software used by the microscopes
- Zhaoyun Tang (BPAG):
  - Met with our client and had our question answered
  - Worked on the PDS
  - Research

Activities:

Date	Name	Task	Time (hours)	Weekly Total	Semester Total
9/15-9/21	Team	- Team Zoom Meeting - Advisor Meeting	- 0.5 - 1.5	2	5

9/17	Tyler	• PDS work • Competition research • Lab standards research • meeting notes	- 3 - 0.5 - 0.5 - 1	5	10.25
9/11	Zhaoyun	• PDS work • Research • Progress Report	• 2 • 1 • .25	3.25	6
9/18	Nick	• PDS work • Research • Progress report	• 1 • 1 • .25	2.25	6
9/19 9/21	Sawyer	• Researched previous year's groups • Worked on pds • Worked on progress report	1 1 0.5	2.5	5.5
9/18 9/20 9/20	Julia	• PDS • Additional Research: for PDS like standards…	- 1 hour - 2 hours - 1 hour	4	10 -(I did work last week but missed the chart)

Weekly/Ongoing Difficulties:

The team has run into a slight issue with accessing necessary components to the project due to the Engineering Centers Building being flooded. The team will not have access to either microscope and the accompanying software until the damages have been repaired. The team will also not have access to the past semester's physical project. Any fabrication using those materials or any measurements needed will not be obtainable until the building is re-opened or a solution to retrieving the project is found.

Upcoming Team and Individual Goals

- Tyler Haupert:
  - We hope to finish, finalize and turn in the PDS by tomorrow at 9 pm. Following this, we will begin drawing up our design solutions and drafting the design matrix, which is due next friday.
- Nick Symons:

    - Start coming up with design ideas. New ideas and improvements on past designs
    - Submit the PDS by Friday
    - Continue to research past designs and how to improve on them
- Sawyer Bussey:
    - Finish PDS, join each bullet into organized and legible paragraphs
    - Create a design to bring to advisor meeting friday
    - Sketch design
    - Brainstorm further designs after team and advisor meeting friday

- Zhaoyun Tang:
    - Help finish the PDS by friday.
    - Brainstorm and try to come up with design ideas before the Friday meeting.
    - Do more research.
- Julia Salita:
    - Finalize and turn in the PDS- by Friday the 21st
    - Propose alterations to current set up or present new design ideas
    - Find a solution to retrieving past semesters physical work for further development of our project

Project Schedule/Timeline:

Project Goal	Deadline	Team Assigned	Progress	Completed
Product Design Specifications	9/22	All	90%	No
Design Matrix	9/29	All	0%	No
Preliminary Presentations	10/6	All	0%	No
Preliminary Deliverables	10/11	All	0%	No
Show and Tell	11/3	All	0%	No
Poster Presentations	12/8	All	0%	No
Final Deliverables	12/13	All	0%	No

Expenses:

- No Purchases as of 9/21

Conclusions/action items:

Progress report 3

Title: Progress report 3

Date: 9/28/23

Content by: Nicholas Symons

Present:

Goals: To fill out and submit the week 3 progress report.

Content: Here is our progress report:

Microscope Low Cost Motorized Stage

Client: Dr. John Puccinelli

Advisor: Dr. Joshua Brockman

Team Members: Tyler Haupert, Julia Salita, Nicholas Symons, Sawyer Bussey, Zhaoyun Tang

Name	Email	Role
Tyler Haupert	thaupert@wisc.edu	Team Leader
Julia Salita	jsalita@wisc.edu	BSAC
Nicholas Symons	nsymons@wisc.edu	Communication
Sawyer Bussey	bussey2@wisc.edu	BWIG
Zhaoyun Tang	ztang259@wisc.edu	BPAG

Reporting Period: September 22nd, 2023 - September 28th, 2023

Problem Statement:

The UW-Madison BME teaching lab currently houses two inverted fluorescent microscopes. While these contemporary pieces of equipment are functional in their current state, they leave a great deal to be desired when it comes to laboratory efficiency. Motorized alternatives do exist, however, cost continues to be a factor limiting the exposure students have to this technology. With a working budget of approximately $100, our team seeks to revolutionize the precision and automation of these microscopes through the creation of a novel microscope stage moving device. This design will allow for sequential, automated imaging of coordinate-based locations on slides. The creation of this device will increase the consistency of measurements, reduce the amount of time spent during data collection, and lower the learning curve for operating this equipment. To remain competitive, design prototypes should be automated in both the X and Y directions and retain high precision and accuracy in translations (1 μm resolution).

Brief Status Update:

This week the team submitted the PDS, began the design matrix, and met with the advisor. Decisions about design prototypes and future directions were made during two team meetings that took place on monday and thursday. The Progress report will be finalized, submitted, and sent out on Friday the 29th (tomorrow).

Summary of Weekly Team Member Design Accomplishments:

- Team:
    - This week the team met with Dr. Brockman on Friday. During this meeting we reviewed our PDS with him and asked him questions regarding formatting, content, and verbosity. We took his feedback into account and submitted our PDS later that night. Following this submission the team focused on brainstorming, drawing designs, and starting the design matrix. The team met on monday and thursday to collaborate on ideas/drawings and work on the design matrix, respectively.
- Tyler Haupert (Team Leader):
    - Documented personal contributions in labarchives
    - Inserted design matrix file in team labarchives folder
    - Worked collaboratively with team to draft and edit out design matrix and justifications
    - Created a drawing for the spur gear design in the design matrix
    - Reviewed previous designs and online sources to come up will possible improvements to the spur gear design used by past groups
        - Size was a concern of the client. I am considering attaching the motors and gears to the microscope via the screw holes available for use. I will need access to the teaching lab to confirm there is enough space to make this possible. If not, I believe smarter choices in 3-D prints and prototype layout could potentially help to create a more compact unit.
- Julia Salita (BSAC):
    - Drafted new preliminary design
    - Referenced past semesters design work to compile information for a new design
- Nick Symons (Communicator):
    - Updated LabArchives with documents and initial design
    - Drafted initial design for design matrix
    - Attended weekly team meeting to start discussing designs
- Sawyer Bussey (BWIG):
    - Updated lab archives
    - Conducted research on worm drive design for design matrix
    - Brainstormed ideas for design matrix
    - Attended meeting to work on design matrix and participated in discussions about possible routes for completion
- Zhaoyun Tang (BPAG):
    - Updated documents on Labarchives
    - Brainstorm ideas for designs
    - Worked on the design matrix

Activities:

Date	Name	Task	Time (hours)	Weekly Total	Semester Total
9/22-9/28	Team	- Advisor Meeting - Team Meeting (Mon) - Team Meeting (Thurs)	- 2 - 1.5 - 1	4.5	9.5
9/25	Tyler	- Brainstorming - Spur gear design research - Design drawings - team meeting notes (both) - design matrix	- 1 - 1 - 0.5 - 1 - 2	5.5	15.75
9/27	Zhaoyun	• Brainstorming • Design matrix • Progress report	- 1.75 - 2 - 0.25	4	10
9/	Nick	• Drafting initial design • Updating lab archives • Progress report	• 2.5 • .5 • .5	3.5	9.5
9/25	Sawyer	• Brainstorming • Design matrix • Progress report • Resarch worm gears and stability improvements	- 1.75 -2 -0.5 -1	5.25	10.75
9/27-28 9/28-9	Julia	• Brainstorming • Updating labarchives	- 2 -2	4	14

Weekly/Ongoing Difficulties:

The primary current difficulty is access to ECB. Design drawings could be much more accurate and to scale if we had access to the microscopes and previous designs. Although some detail will be missing from the drawings in our matrix, the concepts and ideas translated through them should remain valid.

Upcoming Team and Individual Goals

- Tyler Haupert:
  - Update labarchives to fully represent personal and team activities
  - Finalize and review design matrix for submission on 9/29
  - Create and begin working on preliminary presentation

    - Create week 4 progress report
- Nick Symons:
    - Finish and submit the design matrix
    - Continue updating LabArchives with new documents
- Sawyer Bussey:
    - Finish design matrix
    - Upload design matrix to team website
    - Upload sketch of design photos to team website
- Zhaoyun Tang:
    - Help finish the design matrix by Friday
    - Work on Labarchive
    - Attend the BPAG meeting
- Julia Salita:
    - Finish adding all personal contributions, information, and designs to Lab Archives
    - Attend weekly BSAC meeting
    - Work on the preliminary presentation
    - Finish the Design matrix

Project Schedule/Timeline:

Project Goal	Deadline	Team Assigned	Progress	Completed
Product Design Specifications	9/22	All	100%	Yes
Design Matrix	9/29	All	20%	No
Preliminary Presentations	10/6	All	0%	No
Preliminary Deliverables	10/11	All	0%	No
Show and Tell	11/3	All	0%	No
Poster Presentations	12/8	All	0%	No
Final Deliverables	12/13	All	0%	No

Expenses:

- No Purchases as of 9/28

Conclusions/action items:

Progress report 4

NICHOLAS SYMONS - Oct 06, 2023, 9:15 AM CDT

Title: Progress report 4

Date: 10/5/23

Content by: Nicholas Symons

Present:

Goals: to fill out and send the progress report for week 4

Citations:

Content: I finished filling out my sections of the progress report and emailed it to Dr Puccinelli and Dr Brockman.

Conclusions/action items:

NICHOLAS SYMONS - Oct 06, 2023, 9:16 AM CDT

Download

Motorized_Microscope-Progress_Report_4-_9_27-10_5.pdf (93.5 kB)

NICHOLAS SYMONS - Oct 12, 2023, 10:31 AM CDT

Download

Motorized_Microscope-Progress_Report_4-_9_27-10_5.pdf (93.5 kB)

Progress report 5

NICHOLAS SYMONS - Oct 26, 2023, 7:58 AM CDT

Title: Week 5 progress report

Date:

Content by: Nick Symons

Present:

Goals: To finish and email out the progress report.

Citations:

Content: We finished the progress report and I emailed it out to Dr. Puccinelli and Dr. Brockman.

Conclusions/action items: Try to start working on some type of prototype.

NICHOLAS SYMONS - Oct 26, 2023, 7:56 AM CDT

Download

Motorized_Microscope-Progress_Report_5-_10_6-10_12.pdf (94.2 kB)

Progress report 6

NICHOLAS SYMONS - Oct 26, 2023, 9:36 AM CDT

Title: Week 6 progress report

Date:

Content by: Nick Symons

Present:

Goals: To complete and email out the progress report

Citations:

Content: I finished my sections of the report and emailed it out to Dr. Puccinelli and Dr. Brockman.

Conclusions/action items: We need to find a better and safer way to power the motors and drivers so that we can begin testing code on them. We will have to order a power adapter through the MakerSpace. Until then, we can try to begin coding.

NICHOLAS SYMONS - Oct 26, 2023, 9:34 AM CDT

Download

Motorized_Microscope-Progress_Report_6-_10_13-10_19.pdf (93 kB)

Preliminary Report

NICHOLAS SYMONS - Oct 26, 2023, 9:43 AM CDT

Title: Preliminary Report

Date:

Content by: Nick Symons

Present:

Goals: To work on the preliminary report

Citations:

Content: Due to a number of exams on the due date of the report, we asked for and received an extension for the report. The work that I did on the report includes:

- Making 3D models for the proposed designs
- Writing design descriptions
- Writing the fabrication and testing sections
- Writing the material rationale section
- Proofreading the rest of the sections

Conclusions/action items: Now that we have the preliminary report done, we can really focus on getting a product fabricated.

NICHOLAS SYMONS - Oct 26, 2023, 9:43 AM CDT

PRELIMINARY REPORT: MICROSCOPE LOW COST MOTORIZED STAGE

Download

Motorized_Microscope-Preliminary_Report-10_13_2023_1_.pdf (2.74 MB)

Progress report 7

NICHOLAS SYMONS - Dec 01, 2023, 12:18 PM CST

Title: Progress report 7

Date: 12/1/23

Content by: Nick Symons

Present:

Goals: To include our progress reports in the notebook

Citations:

Content: I forgot to include these earlier so I'm uploading them now

Conclusions/action items:

NICHOLAS SYMONS - Dec 01, 2023, 12:19 PM CST

Download

Motorized_Microscope-Progress_Report_7-_10_20-10_26.pdf (246 kB)

Progress report 8

NICHOLAS SYMONS - Dec 01, 2023, 12:20 PM CST

Title: Progress report 8

Date: 12/1/23

Content by: Nick Symons

Present:

Goals:

Citations:

Content:

Conclusions/action items:

NICHOLAS SYMONS - Dec 01, 2023, 12:19 PM CST

Download

Motorized_Microscope-Progress_Report_8-_10_27-11_2.pdf (383 kB)

Progress report 9

NICHOLAS SYMONS - Dec 01, 2023, 12:20 PM CST

Title: Progress report 9

Date: 12/1/23

Content by: Nick Symons

Present:

Goals:

Citations:

Content:

Conclusions/action items:

NICHOLAS SYMONS - Dec 01, 2023, 12:23 PM CST

Download

Motorized_Microscope-Progress_Report_9-_11_3-11_9.pdf (115 kB)

Progress report 10

NICHOLAS SYMONS - Dec 01, 2023, 12:23 PM CST

Title: Progress report 10

Date: 12/1/23

Content by: Nick Symons

Present:

Goals:

Citations:

Content:

Conclusions/action items:

NICHOLAS SYMONS - Dec 01, 2023, 12:24 PM CST

Download

Motorized_Microscope-Progress_Report_10-_11_9-11_16.pdf (115 kB)

Progress report 11

NICHOLAS SYMONS - Dec 01, 2023, 12:24 PM CST

Title: Progress report 11

Date: 12/1/23

Content by: Nick Symons

Present:

Goals:

Citations:

Content:

Conclusions/action items:

NICHOLAS SYMONS - Dec 01, 2023, 12:25 PM CST

Download

Motorized_Microscope-Progress_Report_11-11_17-11_30.pdf (3.18 MB)

Progress report 12

NICHOLAS SYMONS - Dec 15, 2023, 2:05 PM CST

Title: Progress report 12

Date: 12/15/23

Content by: Nick Symons

Present:

Goals: To document our last progress report

Citations:

Content: This is our last progress report for the semester.

Conclusions/action items:

NICHOLAS SYMONS - Dec 15, 2023, 2:05 PM CST

Download

Motorized_Microscope-Progress_Report_12-12_1-12_6.pdf (528 kB)

Motor Movement with Joystick (v1)

NICHOLAS SYMONS - Oct 27, 2023, 2:27 PM CDT

Title: Motor Movement with Joystick (v1)

Date: 10/27/23

Content by: Nick Symons

Present:

Goals: To put together some code that could be used to control the motors with the joystick

Citations:

Content: We don't have the power supply for the drivers and motors yet, but I wanted to get all of the stuff I've learned about the joystick and stepper drivers put together so that we have something to work with once we actually have power. This is mostly just setup type stuff where I defined variables, set pin types, started the serial monitor for troubleshooting, and wrote one if statement that doesn't actually do anything, but at least it's something that we can base later code on.

The code is based on This link to a tutorial for how to code the stepper driver that we're using along with the code that I made in a previous entry called Joystick Research.

I'll attach the file at the bottom of this. It's going to be weird opening it on other computers because it will ask you to make a folder to put the file in, so you'll have to do that.

Conclusions/action items: We need to continue building up this code and begin testing it with the full circuit once we get the power supply.

NICHOLAS SYMONS - Oct 27, 2023, 2:25 PM CDT

Download

Motor_Movement_With_Joystic_v1_.ino (2.46 kB)

Simple Motor Movement

NICHOLAS SYMONS - Nov 01, 2023, 10:29 AM CDT

Title: Simple Motor Movement

Date: 11/1/23

Content by: Nick Symons

Present:

Goals: To use the newly acquired power supply to spin the motors at different speeds

Citations:

Content: The power supply was delivered on 10/30/23 and I was just able to pick it up today. After wiring the motors and drivers to the Arduino, I tried running the code from my previous entry that is supposed to utilize the joystick to move the motors, but it didn't work. I then copied some example code from This website and tried that code, which worked just as expected. I was able to change the delay time in order to change the speed that the motor rotated at. While doing this I found that the smallest delay time that works with the motors is 29 milliseconds. Any delay time that is less than this causes the motor to not spin. I've attached the code for simple motor movement below.

After going back to the joystick movement code and changing the delay time to a value greater than 29, the motors still didn't move.

Conclusions/action items: We will need to figure out why the joystick's input won't move the motors. This is most likely due to the main loop of if statements that takes the data from the joystick and tells the motors to move

NICHOLAS SYMONS - Nov 01, 2023, 10:29 AM CDT

Download

Simple_Motor_Movement.ino (592 B)

Motor Movement with Joystick v2

NICHOLAS SYMONS - Nov 08, 2023, 10:30 AM CST

Title: Motor Movement with Joystick v2

Date: 11/8/23

Content by: Nick Symons

Present: Nick, Julia

Goals: To write code to make the motors move and change directions with the input from the joystick.

Citations:

Content: Me and Julia met to finish writing code that takes the input from the joystick and moves the motors accordingly. We only had one motor and a broken joystick, but we got the code to work. when the joystick is moved one way, the motor moves, and when the joystick is moved the other way, the motor moves in the opposite direction.

I've included the code file below.

Conclusions/action items: We need to fix the joystick by soldering it to a PCB board and attaching wires that can go to the Arduino.

NICHOLAS SYMONS - Nov 08, 2023, 10:29 AM CST

Download

Motor_Movement_With_Joystick_v2_.ino (3.4 kB)

Motor Movement with Serial Monitor Input

NICHOLAS SYMONS - Dec 01, 2023, 12:31 PM CST

Title: Motor Movement with Serial Monitor Input

Date: 11/10/23

Content by: Nick Symons

Present:

Goals: To create code that will take an input value from the user and move the motors accordingly.

Citations:

Content: In order to test the motors with the microscope and get measurements, we need to have a way to input a number of steps that we want the motor to move and then have it move that amount. I haven't been able to test the code at all yet, but it's able to compile without errors, so that's a good start. I used a lot of the concepts from the article that I posted in one of my general research posts (titled Reading user input on the Arduino serial).

The file is attached below.

Note from 12/1/23: This code still doesn't work because of the same problem that we faced when we were first testing the motors: serial print messes with the motor movement. We've tried increasing the baud rate to 115200, but that still didn't help. Until this gets figured out, the Simple motor movement with number of steps can be used for testing.

Conclusions/action items: We need to start testing how far each revolution of the motor moves the stage along with how small of a movement we can get with a 1:1 gear ratio.

NICHOLAS SYMONS - Nov 10, 2023, 2:56 PM CST

Download

Motor_Movement_With_Serial_Input.ino (5.06 kB)

Simple motor movement with number of steps

NICHOLAS SYMONS - Nov 20, 2023, 6:44 PM CST

Title: simple motor movement with number of steps

Date: 11/20/23

Content by: Nick Symons

Present:

Goals: To write code that is able to take the number of steps as an input and then move the motor

Citations:

Content: The motor movement with serial input didn't really work because of the same serial monitor issue that we had when we first tried programming the joystick. The motors don't seem to be able to move when the serial monitor is being used. It's most likely a timing issue where the serial monitor takes too long to update, but we still haven't figured out how to fix it.

In order to get some testing done tonight, I wrote a short bit of code that uses a for loop to move the motor a certain number of steps. I definetely could have wrote it better, but it works how it's supposed to. I've included the file below.

Conclusions/action items: We can now do some testing with the microscope to measure the distance traveled by the stage after a known number of steps moved.

NICHOLAS SYMONS - Nov 20, 2023, 6:48 PM CST

Download

Simple_step_movement.ino (976 B)

Joystick Test Code

NICHOLAS SYMONS - Dec 01, 2023, 12:11 PM CST

Title: Joystick Test Code

Date: 12/1/23

Content by: Nick Symons

Present:

Goals: To write code that can test the joystick by reading the values it outputs

Citations:

Content: I wrote this code a while ago to test the joystick, but forgot to include it in the notebook, so I'm including it now. All it does is read the value of one of the potentiometers from the joystick.

Conclusions/action items: This was the basis of the joystick movement code and helps the user check to see if the joystick is working properly.

NICHOLAS SYMONS - Dec 01, 2023, 12:10 PM CST

Download

Joystick_Test.ino (1.89 kB)

Final Code

NICHOLAS SYMONS - Dec 15, 2023, 2:03 PM CST

Title: Final Arduino Code

Date: 12/15/23

Content by: Nick Symons

Present:

Goals: To include all of the most up to date Arduino code

Citations:

Content: Here is a Link to our google drive folder containing all of our most up to date Arduino code. Everything except the "motor movement with serial input" works as it should. When downloading the files, you will most likely need to create a folder for the file. Your computer should prompt you to do this after trying to download any of the files.

Conclusions/action items:

Stepper Driver Switch Settings

NICHOLAS SYMONS - Nov 27, 2023, 8:21 PM CST

Title: Stepper Driver Switch Settings

Date: 11/27/23

Content by: Nick Symons

Present:

Goals: To keep track of stepper driver settings

Citations:

Content: The stepper drivers have switches on the side that can be used to change the current draw of the drivers as well as the step size that the motors take. There are six switches that can be in a combination of on/off in order to change the settings.

On This tutorial article there are charts that show how to achieve the different step resolutions and different current draws.

The micro step chart:

S1	S2	S3	Microstep resolution
ON	ON	ON	NC
ON	ON	OFF	Full step
ON	OFF	ON	1/2 step
OFF	ON	ON	1/2 step
ON	OFF	OFF	1/4 step
OFF	ON	OFF	1/8 step
OFF	OFF	ON	1/16 step
OFF	OFF	OFF	1/32 step

The current chart:

Current (A)	Peak current	S4	S5	S6
0.5	0.7	ON	ON	ON
1.0	1.2	ON	OFF	ON
1.5	1.7	ON	ON	OFF
2.0	2.2	ON	OFF	OFF
2.5	2.7	OFF	ON	ON
2.8	2.9	OFF	OFF	ON
3.0	3.2	OFF	ON	OFF
3.5	4.0	OFF	OFF	OFF

We are currently using the Full Step and 1.2A current settings, so our switches are: on, on, off, on, off, on.

Conclusions/action items: These seem to be the best settings at the moment, but that could change.

Joystick Wiring

NICHOLAS SYMONS - Dec 01, 2023, 2:03 PM CST

Title: Joystick Wiring

Date: 11/30/23

Content by: Nick Symons

Present: Nick, Tyler

Goals: To buy the new joystick and wire it

Citations:

Content: I bought a new joystick from the makerspace for $4.75. There are 4 long wires coming off of the joystick that all look basically the same except for the little bits of colored wire at the end. The black wire is the Y data wire, the green wire is the 5V, the **round** red wire is the ground, and the **square** red wire is the X data wire. The 5V and the ground should be interchangeable (as far as I know)

Conclusions/action items: We can now attach the potentiometer to the arduino

2014/11/03-Entry guidelines

John Puccinelli - Sep 05, 2016, 1:18 PM CDT

Use this as a guide for every entry

- Every text entry of your notebook should have the **bold titles** below.
- Every page/entry should be **named starting with the date** of the entry's first creation/activity, subsequent material from future dates can be added later.

You can create a copy of the blank template by first opening the desired folder, clicking on "New", selecting "Copy Existing Page...", and then select "2014/11/03-Template")

Title: Descriptive title (i.e. Client Meeting)

Date: 9/5/2016

Content by: The one person who wrote the content

Present: Names of those present if more than just you (not necessary for individual work)

Goals: Establish clear goals for all text entries (meetings, individual work, etc.).

Content:

Contains clear and organized notes (also includes any references used)

Conclusions/action items:

Recap only the most significant findings and/or action items resulting from the entry.

2014/11/03-Template

JULIA SALITA - Sep 30, 2023, 1:08 AM CDT

Title:

Date:

Content by:

Present:

Goals:

Citations:

Content:

Conclusions/action items: